US Ecology Tulsa, Inc.

Part A and B RCRA Operating Permit Application

EPA ID: OKD000402396

Tulsa, Oklahoma

July 11, 2022

Table of Contents

United States Environmental Protection Agency
RCRA SUBTITLE C SITE IDENTIFICATION FORM

1. Reason for Submittal (Select only one.)

☑	Obtaining or updating an EPA ID number for on-going regulated activities (Items 10-17 below) that will continue for a period of time.
☐	Submitting as a component of the Hazardous Waste Report for _____ (Reporting Year)
	☐ Site was a TSD facility, a reverse distributor, and/or generator of ≥ 1,000 kg of non-acute hazardous waste, > 1 kg of acute hazardous waste, or > 100 kg of acute hazardous waste spill cleanup in **one or more months of the reporting year** (or State equivalent LQG regulations)
☐	Notifying that regulated activity is no longer occurring at this Site
☐	Obtaining or updating an EPA ID number for conducting Electronic Manifest Broker activities
☐	Submitting a new or revised Part A (permit) Form

2. Site EPA ID Number

O	K	D	0	0	0	4	0	2	3	9	6

3. Site Name

US Ecology Tulsa, Inc.

4. Site Location Address

Street Address **2700 S. 25th W. Ave.**		
City, Town, or Village **Tulsa**		County **Tulsa**
State **Oklahoma**	Country **USA**	Zip Code **74104**
Latitude	Longitude	☐ Use Lat/Long as Primary Address

5. Site Mailing Address ☑ Same as Location Street Address

Street Address		
City, Town, or Village		
State	Country	Zip Code

6. Site Land Type

☑ Private ☐ County ☐ District ☐ Federal ☐ Tribal ☐ Municipal ☐ State ☐ Other

7. North American Industry Classification System (NAICS) Code(s) for the Site (at least 5-digit codes)

A. (Primary) **562211**	C.
B.	D.

8. Site Contact Information

☑ Same as Location Address

First Name **Shirley**	MI **A**	Last Name **Stout**
Title **Environmental Compliance Manager**		
Street Address		
City, Town, or Village		
State	Country	Zip Code
Email **shirley.stout@usecology.com**		
Phone **918-560-5260**	Ext	Fax **918-560-5252**

9. Legal Owner and Operator of the Site

A. Name of Site's Legal Owner

☐ Same as Location Address

Full Name	Date Became Owner (mm/dd/yyyy)
Owner Type ☑ Private ☐ County ☐ District ☐ Federal ☐ Tribal ☐ Municipal ☐ State ☐ Other	
Street Address	
City, Town, or Village	
State	Country	Zip Code
Email	
Phone	Ext	Fax
Comments	

B. Name of Site's Legal Operator

☐ Same as Location Address

Full Name **US Ecology**	Date Became Operator (mm/dd/yyyy)
Operator Type ☑ Private ☐ County ☐ District ☐ Federal ☐ Tribal ☐ Municipal ☐ State ☐ Other	
Street Address	
City, Town, or Village	
State	Country	Zip Code
Email	
Phone	Ext	Fax
Comments	

10. Type of Regulated Waste Activity (at your site)
Mark "Yes" or "No" for all current activities (as of the date submitting the form); complete any additional boxes as instructed.

A. Hazardous Waste Activities

☑ Y ☐ N	1. Generator of Hazardous Waste—If "Yes", mark only one of the following—a, b, c	
☑	a. LQG	-Generates, in any calendar month, 1,000 kg/mo (2,200 lb/mo) or more of non-acute hazardous waste (includes quantities imported by importer site); or - Generates, in any calendar month, or accumulates at any time, more than 1 kg/mo (2.2 lb/mo) of acute hazardous waste; or - Generates, in any calendar month or accumulates at any time, more than 100 kg/mo (220 lb/mo) of acute hazardous spill cleanup material.
☐	b. SQG	100 to 1,000 kg/mo (220-2,200 lb/mo) of non-acute hazardous waste and no more than 1 kg (2.2 lb) of acute hazardous waste and no more than 100 kg (220 lb) of any acute hazardous spill cleanup material.
☐	c. VSQG	Less than or equal to 100 kg/mo (220 lb/mo) of non-acute hazardous waste.
☐ Y ☑ N	2. Short-Term Generator (generates from a short-term or one-time event and not from on-going processes). If "Yes", provide an explanation in the Comments section. *Note: If "Yes", you MUST indicate that you are a Generator of Hazardous Waste in Item 10.A.1 above.*	
☑ Y ☐ N	3. Treater, Storer or Disposer of Hazardous Waste—Note: Part B of a hazardous waste permit is required for these activities.	
☑ Y ☐ N	4. Receives Hazardous Waste from Off-site	
☑ Y ☐ N	5 Recycler of Hazardous Waste	
☑	a. Recycler who stores prior to recycling	
☐	b. Recycler who does not store prior to recycling	
☐ Y ☑ N	6. Exempt Boiler and/or Industrial Furnace—If "Yes", mark all that apply.	
☐	a. Small Quantity On-site Burner Exemption	
☐	b. Smelting, Melting, and Refining Furnace Exemption	

B. Waste Codes for Federally Regulated Hazardous Wastes. Please list the waste codes of the Federal hazardous wastes handled at your site. List them in the order they are presented in the regulations (e.g. D001, D003, F007, U112). Use an additional page if more spaces are needed.

D001	D006	D011	D016	D021	D026	D031
D002	D007	D012	D017	D022	D027	D032
D003	D008	D013	D018	D023	D028	D033
D004	D009	D014	D019	D024	D029	D034
D005	D010	D015	D020	D025	D030	D035

C. Waste Codes for State Regulated (non-Federal) Hazardous Wastes. Please list the waste codes of the State hazardous wastes handled at your site. List them in the order they are presented in the regulations. Use an additional page if more spaces are needed.

EPA ID: OKD000402396

10B. Additional Waste Codes for Federally Regulated Hazardous Wastes Part A application

D036	F035	K029	K085	K125	P013	P050	P093	P188	U020	U053	U087	U121	U154	U187	U223	U395
D037	F037	K030	K086	K126	P014	P051	P094	P189	U021	U055	U088	U122	U155	U188	U225	U404
D038	F038	K031	K087	K131	P016	P054	P095	P190	U022	U056	U089	U123	U156	U189	U226	U409
D039	F039	K032	K088	K132	P017	P056	P096	P191	U023	U057	U090	U124	U157	U190	U227	U410
D040	K001	K033	K093	K136	P018	P057	P097	P192	U024	U058	U091	U125	U158	U191	U228	U411
D041	K002	K034	K094	K141	P020	P058	P098	P194	U025	U059	U092	U126	U159	U192	U234	
D042	K003	K035	K095	K142	P021	P059	P099	P197	U026	U060	U093	U127	U160	U193	U235	
D043	K004	K036	K096	K143	P022	P060	P101	P198	U027	U061	U094	U128	U161	U194	U236	
F001	K005	K037	K097	K144	P023	P062	P102	P199	U028	U062	U095	U129	U162	U196	U237	
F002	K006	K038	K098	K145	P024	P063	P103	P201	U029	U063	U096	U130	U163	U197	U238	
F003	K007	K039	K099	K147	P026	P064	P104	P202	U030	U064	U097	U131	U164	U200	U239	
F004	K008	K040	K100	K148	P027	P065	P105	P203	U031	U066	U098	U132	U165	U201	U240	
F005	K009	K041	K101	K149	P028	P066	P106	P204	U032	U067	U099	U133	U166	U202	U243	
F006	K009	K042	K102	K150	P029	P067	P108	P205	U033	U068	U101	U134	U167	U203	U244	
F007	K010	K043	K103	K151	P030	P068	P109	U001	U034	U069	U102	U135	U168	U204	U246	
F008	K011	K044	K104	K156	P031	P069	P110	U002	U035	U070	U103	U136	U169	U205	U247	
F009	K013	K045	K105	K157	P033	P070	P111	U003	U036	U071	U105	U137	U170	U206	U248	
F010	K014	K046	K106	K158	P034	P071	P112	U004	U037	U072	U106	U138	U171	U207	U249	
F011	K015	K047	K107	K159	P036	P072	P113	U005	U038	U073	U107	U140	U172	U208	U271	
F012	K016	K048	K108	K161	P037	P073	P114	U006	U039	U074	U108	U141	U173	U209	U278	
F019	K017	K049	K109	P001	P038	P074	P115	U007	U041	U075	U109	U142	U174	U210	U279	
F020	K018	K050	K110	P002	P039	P075	P116	U008	U042	U076	U110	U143	U176	U211	U280	
F021	K019	K051	K111	P003	P040	P076	P117	U009	U043	U077	U111	U144	U177	U213	U328	
F022	K020	K052	K112	P004	P041	P077	P118	U010	U044	U078	U112	U145	U178	U214	U353	
F023	K021	K060	K113	P005	P042	P078	P119	U011	U045	U079	U113	U146	U179	U215	U359	
F024	K022	K061	K114	P006	P043	P081	P120	U012	U046	U080	U114	U147	U180	U216	U364	
F025	K023	K062	K115	P007	P044	P082	P121	U014	U047	U081	U115	U148	U181	U217	U367	
F026	K024	K069	K116	P008	P045	P084	P122	U015	U048	U082	U116	U149	U182	U218	U372	
F027	K025	K071	K117	P009	P046	P085	P123	U016	U049	U083	U117	U150	U183	U219	U373	
F028	K026	K073	K118	P010	P047	P088	P127	U017	U050	U084	U118	U151	U184	U220	U387	
F032	K027	K083	K123	P011	P048	P089	P128	U018	U051	U085	U119	U152	U185	U221	U389	
F034	K028	K084	K124	P012	P049	P092	P185	U019	U052	U086	U120	U153	U186	U222	U394	

11. Additional Regulated Waste Activities (NOTE: Refer to your State regulations to determine if a separate permit is required.)

A. Other Waste Activities

☑ Y ☐ N		1. Transporter of Hazardous Waste—If "Yes", mark all that apply.
	☑	a. Transporter
	☑	b. Transfer Facility (at your site)
☐ Y ☑ N		2. Underground Injection Control
☑ Y ☐ N		3. United States Importer of Hazardous Waste
☐ Y ☑ N		4. Recognized Trader—If "Yes", mark all that apply.
	☐	a. Importer
	☐	b. Exporter
☑ Y ☐ N		5. Importer/Exporter of Spent Lead-Acid Batteries (SLABs) under 40 CFR 266 Subpart G—If "Yes", mark all that apply.
	☑	a. Importer
	☑	b. Exporter

B. Universal Waste Activities

☑ Y ☐ N		1. Large Quantity Handler of Universal Waste (you accumulate 5,000 kg or more) - if "Yes" mark all that apply. Note: Refer to your State regulations to determine what is regulated.
	☑	a. Batteries
	☑	b. Pesticides
	☑	c. Mercury containing equipment
	☑	d. Lamps
	☑	e. Aerosol Cans
	☐	f. Other (specify) _____
	☐	g. Other (specify) _____
☐ Y ☑ N		2. Destination Facility for Universal Waste Note: A hazardous waste permit may be required for this activity.

C. Used Oil Activities

☑ Y ☐ N		1. Used Oil Transporter—If "Yes", mark all that apply.
	☑	a. Transporter
	☑	b. Transfer Facility (at your site)
☐ Y ☑ N		2. Used Oil Processor and/or Re-refiner—If "Yes", mark all that apply.
	☐	a. Processor
	☐	b. Re-refiner
☐ Y ☑ N		3. Off-Specification Used Oil Burner
☐ Y ☑ N		4. Used Oil Fuel Marketer—If "Yes", mark all that apply.
	☐	a. Marketer Who Directs Shipment of Off-Specification Used Oil to Off-Specification Used Oil Burner
	☐	b. Marketer Who First Claims the Used Oil Meets the Specifications

D. Pharmaceutical Activities

☑ Y ☐ N	1. Operating under 40 CFR Part 266, Subpart P for the management of hazardous waste pharmaceuticals—if "Yes", mark only one. Note: See the item-by-item instructions for definitions of healthcare facility and reverse distributor.
☐	a. Healthcare Facility
☑	b. Reverse Distributor
☐ Y ☑ N	2. Withdrawing from operating under 40 CFR Part 266, Subpart P for the management of hazardous waste pharmaceuticals. Note: You may only withdraw if you are a healthcare facility that is a VSQG for all of your hazardous waste, including hazardous waste pharmaceuticals.

12. Eligible Academic Entities with Laboratories—Notification for opting into or withdrawing from managing laboratory hazardous wastes pursuant to 40 CFR Part 262, Subpart K.

☐ Y ☑ N	A. Opting into or currently operating under 40 CFR Part 262, Subpart K for the management of hazardous wastes in laboratories— If "Yes", mark all that apply. Note: See the item-by-item instructions for definitions of types of eligible academic entities.
☐	1. College or University
☐	2. Teaching Hospital that is owned by or has a formal written affiliation with a college or university
☐	3. Non-profit Institute that is owned by or has a formal written affiliation with a college or university
☐ Y ☑ N	B. Withdrawing from 40 CFR Part 262, Subpart K for the management of hazardous wastes in laboratories.

13. Episodic Generation

☐ Y ☑ N	Are you an SQG or VSQG generating hazardous waste from a planned or unplanned episodic event, lasting no more than 60 days, that moves you to a higher generator category. If "Yes", you must fill out the Addendum for Episodic Generator.

14. LQG Consolidation of VSQG Hazardous Waste

☐ Y ☑ N	Are you an LQG notifying of consolidating VSQG Hazardous Waste Under the Control of the Same Person pursuant to 40 CFR 262.17(f)? If "Yes", you must fill out the Addendum for LQG Consolidation of VSQG hazardous waste.

15. Notification of LQG Site Closure for a Central Accumulation Area (CAA) (optional) OR Entire Facility (required)

☐ Y ☑ N	LQG Site Closure of a Central Accumulation Area (CAA) or Entire Facility.
	A. ☐ Central Accumulation Area (CAA) or ☐ Entire Facility
	B. Expected closure date: _____ mm/dd/yyyy
	C. Requesting new closure date: _____ mm/dd/yyyy
	D. Date closed : _____ mm/dd/yyyy ☐ 1. In compliance with the closure performance standards 40 CFR 262.17(a)(8) ☐ 2. Not in compliance with the closure performance standards 40 CFR 262.17(a)(8)

16. Notification of Hazardous Secondary Material (HSM) Activity

☐ Y ☑ N	Are you notifying under 40 CFR 260.42 that you will begin managing, are managing, or will stop managing hazardous secondary material under 40 CFR 260.30, 40 CFR 261.4(a)(23), (24), (25), or (27)? If "Yes", you must fill out the Addendum to the Site Identification Form for Managing Hazardous Secondary Material.

17. Electronic Manifest Broker

☐ Y ☑ N	Are you notifying as a person, as defined in 40 CFR 260.10, electing to use the EPA electronic manifest system to obtain, complete, and transmit an electronic manifest under a contractual relationship with a hazardous waste generator?

18. Comments (include item number for each comment)

Additional page attached for section 10b-Waste Codes for Federally Reulated Hazardous Wastes (page 3a of 8)

19. Certification I certify under penalty of law that this document and all attachments were prepared under my direction or supervision in accordance with a system designed to assure that qualified personnel properly gather and evaluate the information submitted. Based on my inquiry of the person or persons who manage the system, or those persons directly responsible for gathering the information, the information submitted is, to the best of my knowledge and belief, true, accurate, and complete. I am aware that there are significant penalties for submitting false information, including the possibility of fines and imprisonment for knowing violations. **Note: For the RCRA Hazardous Waste Part A permit Application, all owners and operators must sign (see 40 CFR 270.10(b) and 270.11).**

Signature of legal owner, operator or authorized representative	Date (mm/dd/yyyy) **7/7/2022**
Printed Name (First, Middle Initial Last) **Shirley Ann Stout**	Title **Environmental Compliance Manager**
Email **shirley.stout@usecology.com**	

Signature of legal owner, operator or authorized representative	Date (mm/dd/yyyy) **7/7/2022**
Printed Name (First, Middle Initial Last) **Troy Cooley**	Title **General Manager**
Email **troy.cooley@usecology.com**	

United States Environmental Protection Agency

HAZARDOUS WASTE PERMIT PART A FORM

1. Facility Permit Contact

First Name	**Shirley**	MI	**A**	Last Name	**Stout**
Title	**Environmental Compliance Manager**				
Email	**shirley.stout@usecology.com**				
Phone	**918-560-5260**	Ext		Fax	**918-560-5252**

2. Facility Permit Contact Mailing Address

Street Address	**2700 S. 25th W. Ave**				
City, Town, or Village	**Tulsa**				
State	**OK**	Country	**USA**	Zip Code	**74107**

3. Facility Existence Date (mm/dd/yyyy)

1/3/1996

4. Other Environmental Permits

A. Permit Type	B. Permit Number													C. Description
E	2	0	1	9	-	0	8	2	6	-	O			**Synthetic Minor Source Air Permit**

5. Nature of Business

US Ecology Tulsa, Inc. is a Treatment, Storage, and Disposal Facility (TSDF) for hazardous and solid waste.

6. Process Codes and Design Capacities

Line Number		A. Process Code			B. Process Design Capacity		C. Process Total Number of Units	D. Unit Name
					(1) Amount	(2) Unit of Measure		
0	1	S	0	1	45,960	G	3	CMA-1, CMA-2, CMA-3
0	2	S	0	2	68,720	G	4	T-101, T-102, T-103, T-107
0	3	T	0	1	67,720	G	4	T-101, T-102, T-103, T-107
0	4	T	0	1	18,151	G	2	CTA-2a, CTA-2b

7. Description of Hazardous Wastes (Enter codes for Items 7.A, 7.C and 7.D(1))

Line No.		A. EPA Hazardous Waste No.				B. Estimated Annual Qty of Waste	C. Unit of Measure	D. Processes									
								(1) Process Codes									(2) Process Description (if code is not entered in 7.D1))
0	1	D	0	0	1	100,000	T	S	0	1	S	0	2	T	0	1	
0	2	D	0	0	2	100,000	T	S	0	1	S	0	2	T	0	1	
0	3	D	0	0	3	50,000	T	S	0	1	S	0	2	T	0	1	
0	4	D	0	0	4	20,000	T	S	0	1	S	0	2	T	0	1	
0	5	D	0	0	5	10,000	T	S	0	1	S	0	2	T	0	1	
0	6	D	0	0	6	100,000	T	S	0	1	S	0	2	T	0	1	
0	7	D	0	0	7	100,000	T	S	0	1	S	0	2	T	0	1	
0	8	D	0	0	8	100,000	T	S	0	1	S	0	2	T	0	1	
0	9	D	0	0	9	20,000	T	S	0	1	S	0	2	T	0	1	
1	0	D	0	1	0	20,000	T	S	0	1	S	0	2	T	0	1	
1	1	D	0	1	1	50,000	T	S	0	1	S	0	2	T	0	1	

8. Map

Attach to this application a topographical map, or other equivalent map, of the area extending to at least one mile beyond property boundaries. The map must show the outline of the facility, the location of each of its existing intake and discharge structures, each of its hazardous waste treatment, storage, or disposal facilities, and each well where it injects fluids underground. Include all spring, rivers, and other surface water bodies in this map area. See instructions for precise requirements.

9. Facility Drawing

All existing facilities must include a scale drawing of the facility. See instructions for more detail.

10. Photographs

All existing facilities must include photographs (aerial or ground-level) that clearly delineate all existing structures; existing storage, treatment, and disposal areas; and sites of future storage, treatment, or disposal areas. See instructions for more detail.

11. Comments

Additional pages attached for section 7- Descriptions of Hazardous Wastes (pages 8a-8m of 8)

EPA ID: OKD0004023963

7. Description of Hazardous Wastes-Part A Application

Line No.	7.A EPA Haz. Waste Code	7.B Est. annual qty of waste	7.C Unit of Measure	7.D1 Process Code	7.D2 Process Description (if not entered in 7.D1)
12	D012	10,000	T	S01S02000	
13	D013	10,000	T	S01S02000	
14	D014	10,000	T	S01S02000	
15	D015	10,000	T	S01S02000	
16	D016	10,000	T	S01S02000	
17	D017	10,000	T	S01S02000	
18	D018	50,000	T	S01S02000	
19	D019	25,000	T	S01S02000	
20	D020	25,000	T	S01S02000	
21	D021	25,000	T	S01S02000	
22	D022	25,000	T	S01S02000	
23	D023	25,000	T	S01S02000	
24	D024	25,000	T	S01S02000	
25	D025	25,000	T	S01S02000	
26	D026	25,000	T	S01S02000	
27	D027	25,000	T	S01S02000	
28	D028	25,000	T	S01S02000	
29	D029	25,000	T	S01S02000	
30	D030	25,000	T	S01S02000	
31	D031	25,000	T	S01S02000	
32	D032	25,000	T	S01S02000	
33	D033	25,000	T	S01S02000	
34	D034	25,000	T	S01S02000	
35	D035	25,000	T	S01S02000	
36	D036	25,000	T	S01S02000	
37	D037	25,000	T	S01S02000	
38	D038	25,000	T	S01S02000	
39	D039	25,000	T	S01S02000	
40	D040	25,000	T	S01S02000	
41	D041	25,000	T	S01S02000	
42	D042	25,000	T	S01S02000	
43	D043	25,000	T	S01S02000	
44	F001	25,000	T	S01S02000	
45	F002	25,000	T	S01S02000	
46	F003	25,000	T	S01S02000	
47	F004	25,000	T	S01S02000	
48	F005	25,000	T	S01S02000	
49	F006	50,000	T	S01S02000	
50	F007	2,000	T	S01S02000	
51	F008	2,000	T	S01S02000	
52	F009	2,000	T	S01S02000	
53	F010	2,000	T	S01S02000	
54	F011	2,000	T	S01S02000	

EPA ID: OKD0004023963

7. Description of Hazardous Wastes-Part A Application

Line No.	7.A EPA Haz. Waste Code	7.B Est. annual qty of waste	7.C Unit of Measure	7.D1 Process Code	7.D2 Process Description (if not entered in 7.D1)
55	F012	2,000	T	S01S02000	
56	F019	10,000	T	S01S02000	
57	F020	2,000	T	S01S02000	
58	F021	2,000	T	S01S02000	
59	F022	2,000	T	S01S02000	
60	F023	2,000	T	S01S02000	
61	F024	2,000	T	S01S02000	
62	F025	2,000	T	S01S02000	
63	F026	2,000	T	S01S02000	
64	F027	2,000	T	S01S02000	
65	F028	2,000	T	S01S02000	
66	F032	2,000	T	S01S02000	
67	F034	2,000	T	S01S02000	
68	F035	2,000	T	S01S02000	
69	F037	2,000	T	S01S02000	
70	F038	2,000	T	S01S02000	
71	F039	2,000	T	S01S02000	
72	K001	2,000	T	S01S02000	
73	K002	2,000	T	S01S02000	
74	K003	2,000	T	S01S02000	
75	K004	2,000	T	S01S02000	
76	K005	2,000	T	S01S02000	
77	K006	2,000	T	S01S02000	
78	K007	2,000	T	S01S02000	
79	K008	2,000	T	S01S02000	
80	K009	2,000	T	S01S02000	
81	K009	2,000	T	S01S02000	
82	K010	2,000	T	S01S02000	
83	K011	2,000	T	S01S02000	
84	K013	2,000	T	S01S02000	
85	K014	2,000	T	S01S02000	
86	K015	2,000	T	S01S02000	
87	K016	2,000	T	S01S02000	
88	K017	2,000	T	S01S02000	
89	K018	2,000	T	S01S02000	
90	K019	2,000	T	S01S02000	
91	K020	2,000	T	S01S02000	
92	K021	2,000	T	S01S02000	
93	K022	2,000	T	S01S02000	
94	K023	2,000	T	S01S02000	
95	K024	2,000	T	S01S02000	
96	K025	2,000	T	S01S02000	
97	K026	2,000	T	S01S02000	

EPA ID: OKD0004023963

7. Description of Hazardous Wastes-Part A Application

Line No.	7.A EPA Haz. Waste Code	7.B Est. annual qty of waste	7.C Unit of Measure	7.D1 Process Code	7.D2 Process Description (if not entered in 7.D1)
98	K027	2,000	T	S01S02000	
99	K028	2,000	T	S01S02000	
100	K029	2,000	T	S01S02000	
101	K030	2,000	T	S01S02000	
102	K031	2,000	T	S01S02000	
103	K032	2,000	T	S01S02000	
104	K033	2,000	T	S01S02000	
105	K034	2,000	T	S01S02000	
106	K035	2,000	T	S01S02000	
107	K036	2,000	T	S01S02000	
108	K037	2,000	T	S01S02000	
109	K038	2,000	T	S01S02000	
110	K039	2,000	T	S01S02000	
111	K040	2,000	T	S01S02000	
112	K041	2,000	T	S01S02000	
113	K042	2,000	T	S01S02000	
114	K043	2,000	T	S01S02000	
115	K044	2,000	T	S01S02000	
116	K045	2,000	T	S01S02000	
117	K046	2,000	T	S01S02000	
118	K047	2,000	T	S01S02000	
119	K048	50,000	T	S01S02000	
120	K049	50,000	T	S01S02000	
121	K050	50,000	T	S01S02000	
122	K051	50,000	T	S01S02000	
123	K052	50,000	T	S01S02000	
124	K060	10,000	T	S01S02000	
125	K061	2,000	T	S01S02000	
126	K062	50,000	T	S01S02000	
127	K069	2,000	T	S01S02000	
128	K071	2,000	T	S01S02000	
129	K073	2,000	T	S01S02000	
130	K083	2,000	T	S01S02000	
131	K084	2,000	T	S01S02000	
132	K085	2,000	T	S01S02000	
133	K086	2,000	T	S01S02000	
134	K087	10,000	T	S01S02000	
135	K088	2,000	T	S01S02000	
136	K093	2,000	T	S01S02000	
137	K094	2,000	T	S01S02000	
138	K095	2,000	T	S01S02000	
139	K096	2,000	T	S01S02000	
140	K097	2,000	T	S01S02000	

EPA ID: OKD0004023963

7. Description of Hazardous Wastes-Part A Application

Line No.	7.A EPA Haz. Waste Code	7.B Est. annual qty of waste	7.C Unit of Measure	7.D1 Process Code	7.D2 Process Description (if not entered in 7.D1)
141	K098	2,000	T	S01S02000	
142	K099	2,000	T	S01S02000	
143	K100	2,000	T	S01S02000	
144	K101	2,000	T	S01S02000	
145	K102	2,000	T	S01S02000	
146	K103	2,000	T	S01S02000	
147	K104	2,000	T	S01S02000	
148	K105	2,000	T	S01S02000	
149	K106	2,000	T	S01S02000	
150	K107	2,000	T	S01S02000	
151	K108	2,000	T	S01S02000	
152	K109	2,000	T	S01S02000	
153	K110	2,000	T	S01S02000	
154	K111	2,000	T	S01S02000	
155	K112	2,000	T	S01S02000	
156	K113	2,000	T	S01S02000	
157	K114	2,000	T	S01S02000	
158	K115	2,000	T	S01S02000	
159	K116	2,000	T	S01S02000	
160	K117	2,000	T	S01S02000	
161	K118	2,000	T	S01S02000	
162	K123	2,000	T	S01S02000	
163	K124	2,000	T	S01S02000	
164	K125	2,000	T	S01S02000	
165	K126	2,000	T	S01S02000	
166	K131	2,000	T	S01S02000	
167	K132	2,000	T	S01S02000	
168	K136	2,000	T	S01S02000	
169	K141	10,000	T	S01S02000	
170	K142	10,000	T	S01S02000	
171	K143	10,000	T	S01S02000	
172	K144	10,000	T	S01S02000	
173	K145	10,000	T	S01S02000	
174	K147	10,000	T	S01S02000	
175	K148	10,000	T	S01S02000	
176	K149	10,000	T	S01S02000	
177	K150	10,000	T	S01S02000	
178	K151	10,000	T	S01S02000	
179	K156	10,000	T	S01S02000	
180	K157	10,000	T	S01S02000	
181	K158	10,000	T	S01S02000	
182	K159	10,000	T	S01S02000	
183	K161	10,000	T	S01S02000	

EPA ID: OKD0004023963

7. Description of Hazardous Wastes-Part A Application

Line No.	7.A EPA Haz. Waste Code	7.B Est. annual qty of waste	7.C Unit of Measure	7.D1 Process Code	7.D2 Process Description (if not entered in 7.D1)
185	P002	2,000	T	S01S02000	
186	P003	2,000	T	S01S02000	
187	P004	2,000	T	S01S02000	
188	P005	2,000	T	S01S02000	
189	P006	2,000	T	S01S02000	
190	P007	2,000	T	S01S02000	
191	P008	2,000	T	S01S02000	
192	P009	2,000	T	S01S02000	
193	P010	2,000	T	S01S02000	
194	P011	2,000	T	S01S02000	
195	P012	2,000	T	S01S02000	
196	P013	2,000	T	S01S02000	
197	P014	2,000	T	S01S02000	
198	P016	2,000	T	S01S02000	
199	P017	2,000	T	S01S02000	
200	P018	2,000	T	S01S02000	
201	P020	2,000	T	S01S02000	
202	P021	2,000	T	S01S02000	
203	P022	2,000	T	S01S02000	
204	P023	2,000	T	S01S02000	
205	P024	2,000	T	S01S02000	
206	P026	2,000	T	S01S02000	
207	P027	2,000	T	S01S02000	
208	P028	2,000	T	S01S02000	
209	P029	2,000	T	S01S02000	
210	P030	2,000	T	S01S02000	
211	P031	2,000	T	S01S02000	
212	P033	2,000	T	S01S02000	
213	P034	2,000	T	S01S02000	
214	P036	2,000	T	S01S02000	
215	P037	2,000	T	S01S02000	
216	P038	2,000	T	S01S02000	
217	P039	2,000	T	S01S02000	
218	P040	2,000	T	S01S02000	
219	P041	2,000	T	S01S02000	
220	P042	2,000	T	S01S02000	
221	P043	2,000	T	S01S02000	
222	P044	2,000	T	S01S02000	
223	P045	2,000	T	S01S02000	
224	P046	2,000	T	S01S02000	
225	P047	2,000	T	S01S02000	
226	P048	2,000	T	S01S02000	
227	P049	2,000	T	S01S02000	

EPA ID: OKD0004023963

7. Description of Hazardous Wastes-Part A Application

Line No.	7.A EPA Haz. Waste Code	7.B Est. annual qty of waste	7.C Unit of Measure	7.D1 Process Code	7.D2 Process Description (if not entered in 7.D1)
229	P051	2,000	T	S01S02000	
230	P054	2,000	T	S01S02000	
231	P056	2,000	T	S01S02000	
232	P057	2,000	T	S01S02000	
233	P058	2,000	T	S01S02000	
234	P059	2,000	T	S01S02000	
235	P060	2,000	T	S01S02000	
236	P062	2,000	T	S01S02000	
237	P063	2,000	T	S01S02000	
238	P064	2,000	T	S01S02000	
239	P065	2,000	T	S01S02000	
240	P066	2,000	T	S01S02000	
241	P067	2,000	T	S01S02000	
242	P068	2,000	T	S01S02000	
243	P069	2,000	T	S01S02000	
244	P070	2,000	T	S01S02000	
245	P071	2,000	T	S01S02000	
246	P072	2,000	T	S01S02000	
247	P073	2,000	T	S01S02000	
248	P074	2,000	T	S01S02000	
249	P075	2,000	T	S01S02000	
250	P076	2,000	T	S01S02000	
251	P077	2,000	T	S01S02000	
252	P078	2,000	T	S01S02000	
253	P081	2,000	T	S01S02000	
254	P082	2,000	T	S01S02000	
255	P084	2,000	T	S01S02000	
256	P085	2,000	T	S01S02000	
257	P088	2,000	T	S01S02000	
258	P089	2,000	T	S01S02000	
259	P092	2,000	T	S01S02000	
260	P093	2,000	T	S01S02000	
261	P094	2,000	T	S01S02000	
262	P095	2,000	T	S01S02000	
263	P096	2,000	T	S01S02000	
264	P097	2,000	T	S01S02000	
265	P098	2,000	T	S01S02000	
266	P099	2,000	T	S01S02000	
267	P101	2,000	T	S01S02000	
268	P102	2,000	T	S01S02000	
269	P103	2,000	T	S01S02000	
270	P104	2,000	T	S01S02000	
271	P105	2,000	T	S01S02000	

EPA ID: OKD0004023963

7. Description of Hazardous Wastes-Part A Application

Line No.	7.A EPA Haz. Waste Code	7.B Est. annual qty of waste	7.C Unit of Measure	7.D1 Process Code	7.D2 Process Description (if not entered in 7.D1)
273	P108	2,000	T	S01S02000	
274	P109	2,000	T	S01S02000	
275	P110	2,000	T	S01S02000	
276	P111	2,000	T	S01S02000	
277	P112	2,000	T	S01S02000	
278	P113	2,000	T	S01S02000	
279	P114	2,000	T	S01S02000	
280	P115	2,000	T	S01S02000	
281	P116	2,000	T	S01S02000	
282	P117	2,000	T	S01S02000	
283	P118	2,000	T	S01S02000	
284	P119	2,000	T	S01S02000	
285	P120	2,000	T	S01S02000	
286	P121	2,000	T	S01S02000	
287	P122	2,000	T	S01S02000	
288	P123	2,000	T	S01S02000	
289	P127	2,000	T	S01S02000	
290	P128	2,000	T	S01S02000	
291	P185	2,000	T	S01S02000	
292	P188	2,000	T	S01S02000	
293	P189	2,000	T	S01S02000	
294	P190	2,000	T	S01S02000	
295	P191	2,000	T	S01S02000	
296	P192	2,000	T	S01S02000	
297	P194	2,000	T	S01S02000	
298	P197	2,000	T	S01S02000	
299	P198	2,000	T	S01S02000	
300	P199	2,000	T	S01S02000	
301	P201	2,000	T	S01S02000	
302	P202	2,000	T	S01S02000	
303	P203	2,000	T	S01S02000	
304	P204	2,000	T	S01S02000	
305	P205	2,000	T	S01S02000	
306	U001	2,000	T	S01S02000	
307	U002	2,000	T	S01S02000	
308	U003	2,000	T	S01S02000	
309	U004	2,000	T	S01S02000	
310	U005	2,000	T	S01S02000	
311	U006	2,000	T	S01S02000	
312	U007	2,000	T	S01S02000	
313	U008	2,000	T	S01S02000	
314	U009	2,000	T	S01S02000	
315	U010	2,000	T	S01S02000	

EPA ID: OKD0004023963

7. Description of Hazardous Wastes-Part A Application

Line No.	7.A EPA Haz. Waste Code	7.B Est. annual qty of waste	7.C Unit of Measure	7.D1 Process Code	7.D2 Process Description (if not entered in 7.D1)
317	U012	2,000	T	S01S02000	
318	U014	2,000	T	S01S02000	
319	U015	2,000	T	S01S02000	
320	U016	2,000	T	S01S02000	
321	U017	2,000	T	S01S02000	
322	U018	2,000	T	S01S02000	
323	U019	2,000	T	S01S02000	
324	U020	2,000	T	S01S02000	
325	U021	2,000	T	S01S02000	
326	U022	2,000	T	S01S02000	
327	U023	2,000	T	S01S02000	
328	U024	2,000	T	S01S02000	
329	U025	2,000	T	S01S02000	
330	U026	2,000	T	S01S02000	
331	U027	2,000	T	S01S02000	
332	U028	2,000	T	S01S02000	
333	U029	2,000	T	S01S02000	
334	U030	2,000	T	S01S02000	
335	U031	2,000	T	S01S02000	
336	U032	2,000	T	S01S02000	
337	U033	2,000	T	S01S02000	
338	U034	2,000	T	S01S02000	
339	U035	2,000	T	S01S02000	
340	U036	2,000	T	S01S02000	
341	U037	2,000	T	S01S02000	
342	U038	2,000	T	S01S02000	
343	U039	2,000	T	S01S02000	
344	U041	2,000	T	S01S02000	
345	U042	2,000	T	S01S02000	
346	U043	2,000	T	S01S02000	
347	U044	2,000	T	S01S02000	
348	U045	2,000	T	S01S02000	
349	U046	2,000	T	S01S02000	
350	U047	2,000	T	S01S02000	
351	U048	2,000	T	S01S02000	
352	U049	2,000	T	S01S02000	
353	U050	2,000	T	S01S02000	
354	U051	2,000	T	S01S02000	
355	U052	2,000	T	S01S02000	
356	U053	2,000	T	S01S02000	
357	U055	2,000	T	S01S02000	
358	U056	2,000	T	S01S02000	
359	U057	2,000	T	S01S02000	

EPA ID: OKD0004023963

7. Description of Hazardous Wastes-Part A Application

Line No.	7.A EPA Haz. Waste Code	7.B Est. annual qty of waste	7.C Unit of Measure	7.D1 Process Code	7.D2 Process Description (if not entered in 7.D1)
361	U059	2,000	T	S01S02000	
362	U060	2,000	T	S01S02000	
363	U061	2,000	T	S01S02000	
364	U062	2,000	T	S01S02000	
365	U063	2,000	T	S01S02000	
366	U064	2,000	T	S01S02000	
367	U066	2,000	T	S01S02000	
368	U067	2,000	T	S01S02000	
369	U068	2,000	T	S01S02000	
370	U069	2,000	T	S01S02000	
371	U070	2,000	T	S01S02000	
372	U071	2,000	T	S01S02000	
373	U072	2,000	T	S01S02000	
374	U073	2,000	T	S01S02000	
375	U074	2,000	T	S01S02000	
376	U075	2,000	T	S01S02000	
377	U076	2,000	T	S01S02000	
378	U077	2,000	T	S01S02000	
379	U078	2,000	T	S01S02000	
380	U079	2,000	T	S01S02000	
381	U080	2,000	T	S01S02000	
382	U081	2,000	T	S01S02000	
383	U082	2,000	T	S01S02000	
384	U083	2,000	T	S01S02000	
385	U084	2,000	T	S01S02000	
386	U085	2,000	T	S01S02000	
387	U086	2,000	T	S01S02000	
388	U087	2,000	T	S01S02000	
389	U088	2,000	T	S01S02000	
390	U089	2,000	T	S01S02000	
391	U090	2,000	T	S01S02000	
392	U091	2,000	T	S01S02000	
393	U092	2,000	T	S01S02000	
394	U093	2,000	T	S01S02000	
395	U094	2,000	T	S01S02000	
396	U095	2,000	T	S01S02000	
397	U096	2,000	T	S01S02000	
398	U097	2,000	T	S01S02000	
399	U098	2,000	T	S01S02000	
400	U099	2,000	T	S01S02000	
401	U101	2,000	T	S01S02000	
402	U102	2,000	T	S01S02000	
403	U103	2,000	T	S01S02000	

EPA ID: OKD0004023963

7. Description of Hazardous Wastes-Part A Application

Line No.	7.A EPA Haz. Waste Code	7.B Est. annual qty of waste	7.C Unit of Measure	7.D1 Process Code	7.D2 Process Description (if not entered in 7.D1)
405	U106	2,000	T	S01S02000	
406	U107	2,000	T	S01S02000	
407	U108	2,000	T	S01S02000	
408	U109	2,000	T	S01S02000	
409	U110	2,000	T	S01S02000	
410	U111	2,000	T	S01S02000	
411	U112	2,000	T	S01S02000	
412	U113	2,000	T	S01S02000	
413	U114	2,000	T	S01S02000	
414	U115	2,000	T	S01S02000	
415	U116	2,000	T	S01S02000	
416	U117	2,000	T	S01S02000	
417	U118	2,000	T	S01S02000	
418	U119	2,000	T	S01S02000	
419	U120	2,000	T	S01S02000	
420	U121	2,000	T	S01S02000	
421	U122	2,000	T	S01S02000	
422	U123	2,000	T	S01S02000	
423	U124	2,000	T	S01S02000	
424	U125	2,000	T	S01S02000	
425	U126	2,000	T	S01S02000	
426	U127	2,000	T	S01S02000	
427	U128	2,000	T	S01S02000	
428	U129	2,000	T	S01S02000	
429	U130	2,000	T	S01S02000	
430	U131	2,000	T	S01S02000	
431	U132	2,000	T	S01S02000	
432	U133	2,000	T	S01S02000	
433	U134	2,000	T	S01S02000	
434	U135	2,000	T	S01S02000	
435	U136	2,000	T	S01S02000	
436	U137	2,000	T	S01S02000	
437	U138	2,000	T	S01S02000	
438	U140	2,000	T	S01S02000	
439	U141	2,000	T	S01S02000	
440	U142	2,000	T	S01S02000	
441	U143	2,000	T	S01S02000	
442	U144	2,000	T	S01S02000	
443	U145	2,000	T	S01S02000	
444	U146	2,000	T	S01S02000	
445	U147	2,000	T	S01S02000	
446	U148	2,000	T	S01S02000	
447	U149	2,000	T	S01S02000	

EPA ID: OKD0004023963

7. Description of Hazardous Wastes-Part A Application

Line No.	7.A EPA Haz. Waste Code	7.B Est. annual qty of waste	7.C Unit of Measure	7.D1 Process Code	7.D2 Process Description (if not entered in 7.D1)
449	U151	2,000	T	S01S02000	
450	U152	2,000	T	S01S02000	
451	U153	2,000	T	S01S02000	
452	U154	2,000	T	S01S02000	
453	U155	2,000	T	S01S02000	
454	U156	2,000	T	S01S02000	
455	U157	2,000	T	S01S02000	
456	U158	2,000	T	S01S02000	
457	U159	20,000	T	S01S02000	
458	U160	2,000	T	S01S02000	
459	U161	20,000	T	S01S02000	
460	U162	2,000	T	S01S02000	
461	U163	2,000	T	S01S02000	
462	U164	2,000	T	S01S02000	
463	U165	20,000	T	S01S02000	
464	U166	2,000	T	S01S02000	
465	U167	2,000	T	S01S02000	
466	U168	2,000	T	S01S02000	
467	U169	2,000	T	S01S02000	
468	U170	2,000	T	S01S02000	
469	U171	2,000	T	S01S02000	
470	U172	2,000	T	S01S02000	
471	U173	2,000	T	S01S02000	
472	U174	2,000	T	S01S02000	
473	U176	2,000	T	S01S02000	
474	U177	2,000	T	S01S02000	
475	U178	2,000	T	S01S02000	
476	U179	2,000	T	S01S02000	
477	U180	2,000	T	S01S02000	
478	U181	2,000	T	S01S02000	
479	U182	2,000	T	S01S02000	
480	U183	2,000	T	S01S02000	
481	U184	2,000	T	S01S02000	
482	U185	2,000	T	S01S02000	
483	U186	2,000	T	S01S02000	
484	U187	2,000	T	S01S02000	
485	U188	2,000	T	S01S02000	
486	U189	2,000	T	S01S02000	
487	U190	2,000	T	S01S02000	
488	U191	2,000	T	S01S02000	
489	U192	2,000	T	S01S02000	
490	U193	2,000	T	S01S02000	
491	U194	2,000	T	S01S02000	

EPA ID: OKD0004023963

7. Description of Hazardous Wastes-Part A Application

Line No.	7.A EPA Haz. Waste Code	7.B Est. annual qty of waste	7.C Unit of Measure	7.D1 Process Code	7.D2 Process Description (if not entered in 7.D1)
493	U197	2,000	T	S01S02000	
494	U200	2,000	T	S01S02000	
495	U201	2,000	T	S01S02000	
496	U202	2,000	T	S01S02000	
497	U203	2,000	T	S01S02000	
498	U204	2,000	T	S01S02000	
499	U205	2,000	T	S01S02000	
500	U206	2,000	T	S01S02000	
501	U207	2,000	T	S01S02000	
502	U208	2,000	T	S01S02000	
503	U209	2,000	T	S01S02000	
504	U210	20,000	T	S01S02000	
505	U211	2,000	T	S01S02000	
506	U213	2,000	T	S01S02000	
507	U214	2,000	T	S01S02000	
508	U215	2,000	T	S01S02000	
509	U216	2,000	T	S01S02000	
510	U217	2,000	T	S01S02000	
511	U218	2,000	T	S01S02000	
512	U219	2,000	T	S01S02000	
513	U220	20,000	T	S01S02000	
514	U221	2,000	T	S01S02000	
515	U222	2,000	T	S01S02000	
516	U223	2,000	T	S01S02000	
517	U225	2,000	T	S01S02000	
518	U226	2,000	T	S01S02000	
519	U227	20,000	T	S01S02000	
520	U228	20,000	T	S01S02000	
521	U234	2,000	T	S01S02000	
522	U235	2,000	T	S01S02000	
523	U236	2,000	T	S01S02000	
524	U237	2,000	T	S01S02000	
525	U238	2,000	T	S01S02000	
526	U239	20,000	T	S01S02000	
527	U240	20,000	T	S01S02000	
528	U243	2,000	T	S01S02000	
529	U244	2,000	T	S01S02000	
530	U246	2,000	T	S01S02000	
531	U247	2,000	T	S01S02000	
532	U248	2,000	T	S01S02000	
533	U249	2,000	T	S01S02000	
534	U271	2,000	T	S01S02000	
535	U278	2,000	T	S01S02000	

EPA ID: OKD0004023963

7. Description of Hazardous Wastes-Part A Application

Line No.	7.A EPA Haz. Waste Code	7.B Est. annual qty of waste	7.C Unit of Measure	7.D1 Process Code	7.D2 Process Description (if not entered in 7.D1)
537	U280	2,000	T	S01S02000	
538	U328	2,000	T	S01S02000	
539	U353	2,000	T	S01S02000	
540	U359	2,000	T	S01S02000	
541	U364	2,000	T	S01S02000	
542	U367	2,000	T	S01S02000	
543	U372	2,000	T	S01S02000	
544	U373	2,000	T	S01S02000	
545	U387	20,000	T	S01S02000	
546	U389	20,000	T	S01S02000	
547	U394	2,000	T	S01S02000	
548	U395	2,000	T	S01S02000	
549	U404	2,000	T	S01S02000	
550	U409	2,000	T	S01S02000	
551	U410	2,000	T	S01S02000	
552	U411	2,000	T	S01S02000	

US Ecology Tulsa, In.

EPA ID: OKD000402396

US Ecology Tulsa, Inc. Photos for Part A Application Section 10

Access controlled main gate to facility

Additional photos of access controlled main gate

Main Office entrance

Unloading dock for Container Management Area 3 (CMA-3)

North lot outside CMA-3 (storage of nonhazardous and solid hazardous waste)

Indoor trailer unloading area outside CMA-3

Container Management Area 3 (CMA-3)

Additional photo of Container Management Area 3 (CMA-3)

Storage Row in CMA-3 with concrete berm

Retail waste sorting area and empty container storage outside CMA-3

Holding area for treated waste awaiting lab results south of laboratory

Main entrance to laboratory and lab supply storage

Stabilization treatment pan CTA-2a

Stabilization treatment pan CTA-2b

South side of Container management area 1 (CMA-1) by stabilization

Container Management Area 1 (CMA-1)

Loading dock for CMA-1 area

Empty roll-off container storage area at north end of facility

Container management Area 2 and Tank Farm 1 unloading area (empty containers storage as well)

Container management area 2

Tank Farm 1 (Containment area for T-101, T-102, T-103, and T-107)

West side of Tank Farm 1

100- year flood zone area of facility (no waste activities occur in this area. Only empty container storage)

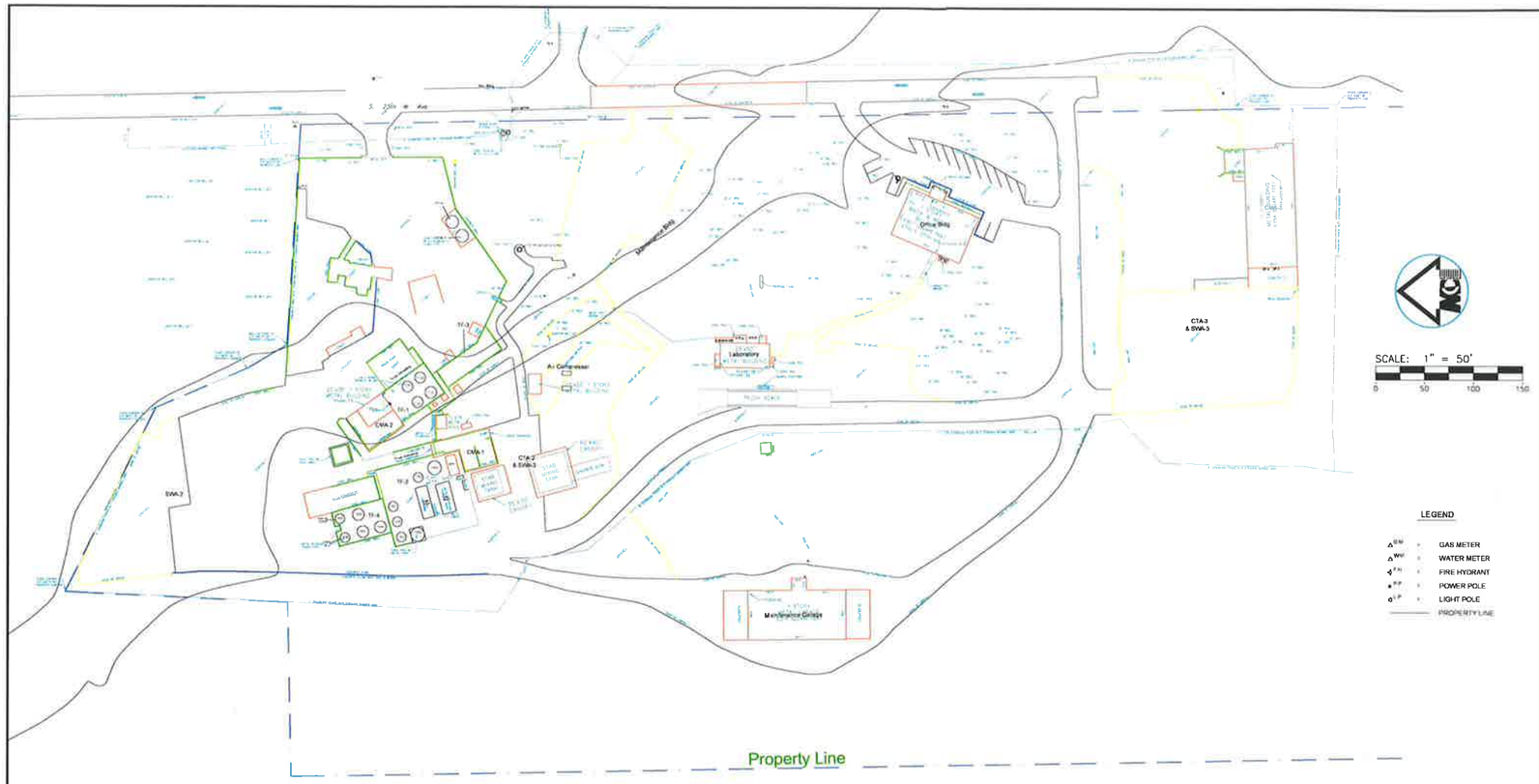

TANK SCHEDULE
HAZARDOUS WASTE STORAGE

UNIT	VOLUME	CONTENTS
T101	16,800 gal	HAZARDOUS WASTE LIQUID
T102	19,960 gal	HAZARDOUS WASTE LIQUID
T103	19,960 gal	HAZARDOUS WASTE LIQUID
T107	20,000 gal	HAZARDOUS WASTE LIQUID

TANK SCHEDULE
NON-HAZARDOUS WASTE STORAGE

UNIT	VOLUME	CONTENTS
T201	1,000 gal	NON-HAZARDOUS WASTE LIQUID
T202	5,200 gal	NON-HAZARDOUS WASTE LIQUID
T203	14,700 gal	NON-HAZARDOUS WASTE LIQUID
T204	40,000 gal	NON-HAZARDOUS WASTE LIQUID
T205	20,000 gal	NON-HAZARDOUS WASTE LIQUID
T402	27,000 gal	NON-HAZARDOUS WASTE LIQUID
T403	27,000 gal	NON-HAZARDOUS WASTE LIQUID
T404	16,000 gal	NON-HAZARDOUS WASTE LIQUID
T406	5,000 gal	NON-HAZ USED OIL & WATER

CLEAN WATER ACT
TREATMENT TANKS

UNIT	VOLUME	CONTENTS
POTW-1	20,000 gal	OUT OF SERVICE
POTW-2	20,000 gal	OUT OF SERVICE

PRODUCT TANK
TANK SCHEDULE

UNIT	VOLUME	CONTENTS
T405	5,000 gal	DIESEL FUEL

CONTAINER STORAGE
TREATMENT AREAS

UNIT	PERMITTED STORAGE VOLUME	ACTIVITY
CMA-1	10,560 gal	HAZ WASTE STORAGE
CMA-2	4,840 gal	HAZ WASTE STORAGE
CMA-3	30,560 gal	HAZ WASTE STORAGE
CTA-2	120 cu yd	HAZ WASTE TREATMENT & STORAGE
CTA-3	900 cu yd	SOLID HAZ WASTE STORAGE
SWA-2	N/A	SOLID WASTE MANAGEMENT
SWA-3	N/A	SOLID WASTE MANAGEMENT
SWA-5	N/A	SOLID WASTE MANAGEMENT

HAZ-WASTE TREATMENT PANS:
- CTA-2a: 24' x 16' x 4'
- CTA-2b: 14' x 14.5' x 4'

REV	DATE	BY	DESCRIPTION
A	3/29/22	WT	Permit Renewal Updates

US ecology
2700 South 25th West Ave. • Tulsa, OK 74107
Phone (918) 582-9595

DRAWN BY: WT
CHECKED BY:
PROJECT NUMBER:

DRAWING NAME: US Ecology Tulsa, Inc.
General Facility Layout

DRAWING NUMBER: Figure A-2
REV: A

A-2

REV	DATE	BY	DESCRIPTION
A	5/24/22	KCT	Permit Renewal Updates

US ecology
2700 South 25th West Ave. • Tulsa, OK 74107
Phone (918) 582-9595

DRAWN BY | CHECKED BY | PROJECT NUMBER

DRAWING NAME: US Ecology Tulsa, Inc.
Topographic Site Map

DRAWING NUMBER: Figure B-2

REV: A

B-2

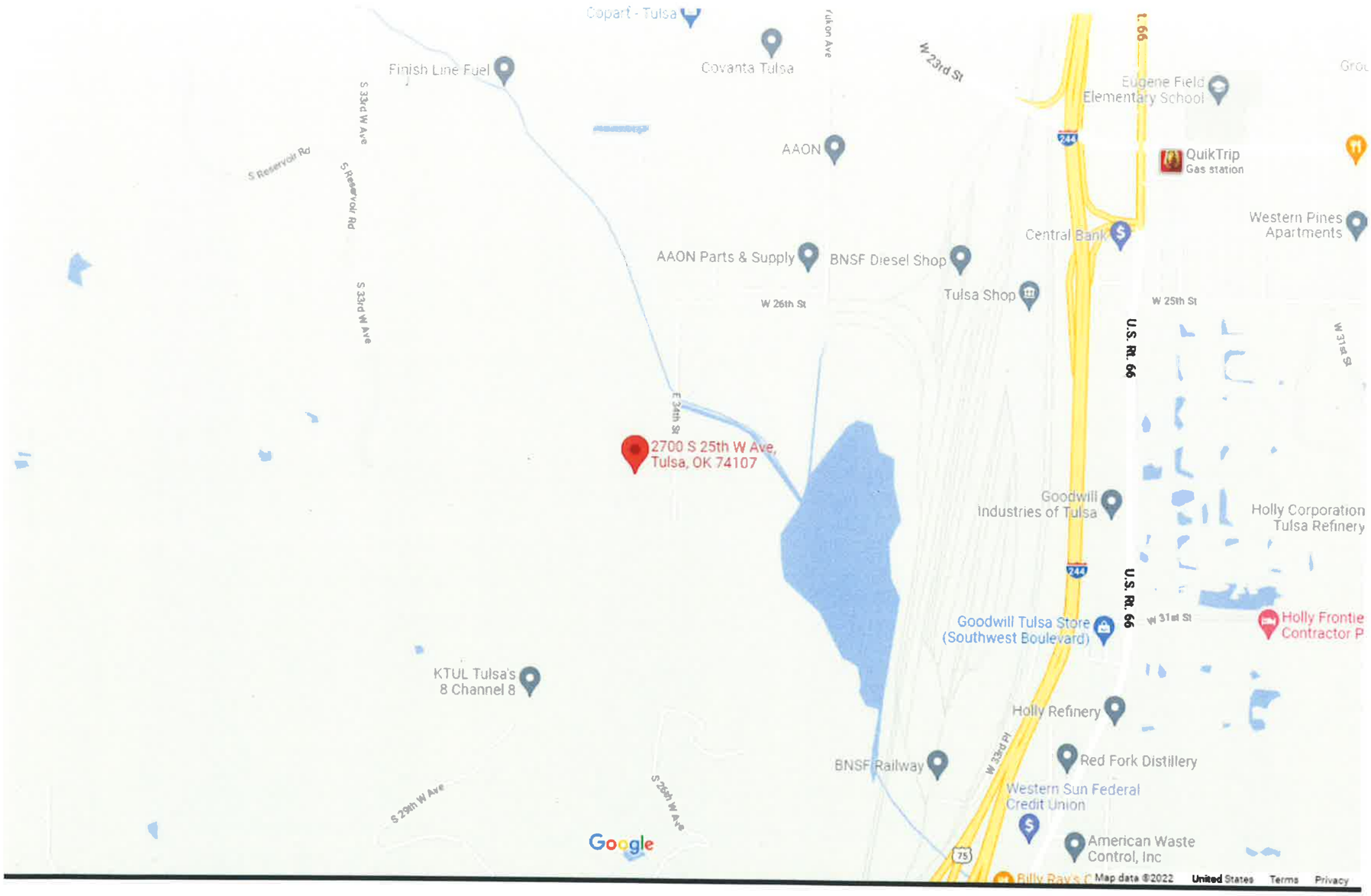

Surrounding land use

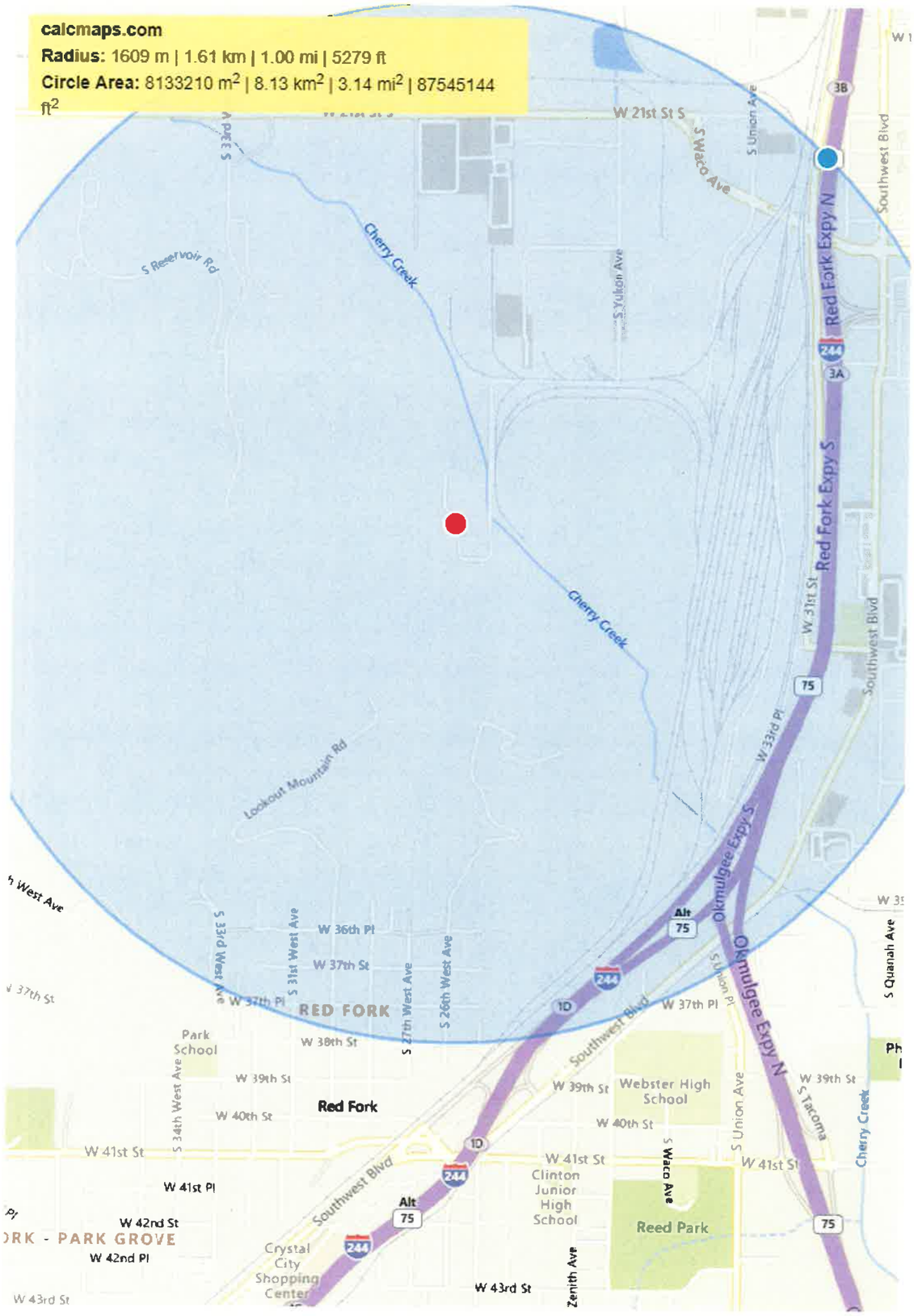

map with 1mile radius

SECTION B

RCRA Part B Permit Application

GENERAL INFORAMTION

US Ecology Tulsa, Inc.

EPA ID: OKD000402396

Tulsa, Oklahoma

Permit Application **July 5, 2022**

Section B-General Information Table of Contents

SECTION B-GENERAL INFORMATION

This section provides a general description of the US Ecology Tulsa, Inc. hazardous waste management facility as required by 40 CFR 270.14, 40 CFR Part 264, and applicable rules and regulations under the Oklahoma Hazardous Waste Management Act (OHWMA) administered by the Oklahoma Department of Environmental Quality (ODEQ). Additional details are presented in attachments that will be identified in this document. Information regarding solid waste activities, in accordance with the requirements of the Oklahoma Solid Waste Management Act (OSWMA) and regulations, are provided in Attachment 12-Solid Waste Management Activities.

1) GENERAL DESCRIPTION: 40 CFR 270.14(b)(1)

US Ecology Tulsa, Inc. is located in an industrial area west of Tulsa, Oklahoma. The facility is located in Tulsa County outside the Tulsa city limits. The facility street address, mailing address and corresponding telephone numbers are provided in Part A of the Permit Application.

US Ecology Tulsa operates an industrial solid and hazardous waste treatment, storage, and disposal facility. Currently, hazardous waste management on-site includes storage and treatment of a wide variety of industrial wastes; solid waste management includes storage, treatment, and disposal of a wide variety of waste types.

In addition to wastes from off-site generators, US Ecology Tulsa will manage site-generated wastes. Waste management on-site may include transfer facility activities such as storage prior to shipment off-site as well as transfer station activities such as bulking, decanting, etc.

The following methods of treatment may be used upon waste received or generated at the facility: carbon absorption, chemical fixation, chemical reduction, deactivation, decanting, encapsulation, filtration, gravity and chemical separation, neutralization, precipitation, solidification, stabilization, and ultrafiltration.

2) CHEMICAL AND PHYSICAL ANALYSES OF HAZARDOUS WASTES: 40 CFR 270.14(b)(2)

The information required for the chemical and physical analyses of hazardous wastes at US Ecology Tulsa, Inc. will be included in Attachment 2-Waste Analysis Plan.

3) WASTE ANALYSIS PLAN: 40 CFR 270.14(b)(3)

The Waste Analysis Plan for US Ecology Tulsa, Inc. is in Attachment 2-Waste Analysis Plan.

4) DESCRIPTION OF SECURITY MEASURES: 40 CFR 270(b)(4)

The description of security measures for US Ecology Tulsa, Inc. is in Attachment 3- Security and Fencing.

5) GENERAL INSPECTION SCHEDULE: 40 CFR 270.14(b)(5)

The general inspection schedule and associated forms is in Attachment 4- Inspection Schedules and Forms.

6) JUSTIFICATION OF REQUESTS FOR A WAIVER OF PREPAREDNESS AND PREVENTION: 40 CFR 270.14(b)(6)

US Ecology Tulsa, Inc. has not requested any waivers of preparedness and prevention, so this section is not applicable, and no information is provided.

7) CONTINGENCY PLAN: 40 CFR 270.14(b)(7)

A copy of the Contingency Plan for US Ecology Tulsa is in Attachment 5- Contingency Plan

8) PREVENTATIVE SAFETY PROCEDURES, EQUIPMENT, AND CONSTRUCTION: 40 CFR 270.14(b)(8)

Descriptions of safety procedures, equipment, and construction to prevent the following events are located in Attachment 6- Procedures to Prevent Hazards

9) PREVENTION OF ACCIDENTAL IGNITION, REACTION OF IGNITABLE, REACTIVE, OR INCOMPATIBLE WASTE: 40 CFR 270.14(b)(9)

Processes and procedures in place for the prevention or accidental ignition, reaction of ignitable, reactive, or incompatible waste are located in attachment 6- Procedures to Prevent Hazards.

10) TRAFFIC PATTERN INFORMATION: 40 CFR 270.14(b)(10)

Vehicle access to the US Ecology Tulsa, Inc. facility is provided by city streets. Truck traffic will proceed south from 21st Street on Yukon and subsequently west on 26th Street. Continuing a distance of approximately one quarter of a mile on 26th Street, a left-hand turn is made at 25th West Avenue. The facility entrance is straight ahead, approximately one quarter of a mile from the 26th Street junction. A map depicting traffic patterns is available in Attachment 1- Maps and Figures

a) TRAFFIC CONTROL

Traffic is controlled by orderly receipt of trucks on-site. Trucks are instructed to park in the designated parking, staging, or unloading areas. Cars entering the facility are confined to the parking areas. Wastes are shipped to and from the facility, in tankers and other trucks. A maximum of 30 tank trucks can be accommodated daily with the current average of 5 trucks entering the facility daily.

b) ACCESS ROAD SURFACING

Access roads to the facility are composed of blacktop asphalt; these roads are maintained by the City or County of Tulsa depending on jurisdiction.

c) LOAD-BEARING CAPACITY

All roads are capable of bearing loads in excess of 50 psi. The tankers and trucks used to haul waste to the site could cause a load bearing of 25 psi, which is well below the load-bearing capacity of the roads. Access roads are maintained by the City of Tulsa and Tulsa County.

d) TRAFFIC CONTROL SYSTEMS

The US Ecology Tulsa, Inc. facility is in a small, isolated location, which does not require traffic control signals.

11) FACILITY LOCATION INFORMATION: 40 CFR 270.14(b)(11)

a) POLITICAL JURISDICTION

The legal description of the US Ecology Tulsa, Inc. facility is as follows:

A tract of land that is all of the north half of the southeast quarter of the southeast quarter of the southwest quarter (N/2 SE/4 SE/4 SW/4) and all of the northeast quarter of the southeast quarter of the southwest quarter (NE/4 SE/4 SW/4) and part of the southeast quarter of the northeast quarter of the southwest quarter (SE/4 NE/4 SW/4), all in section fifteen (15), township nineteen (19) north, range twelve (12) east of the Indian Base and Meridian, Tulsa County, State of Oklahoma, according to the U.S. Government Survey thereof, said tract of land being more particularly described as follows:

Beginning at a point that is the southeast corner of said N/2 of the SE/4 of the SE/4 of the SW/4; thence S 88° 49’ 53” W along the southerly line thereof for 660.74 feet to the southwest corner of the N/2 of the SE/4 of the SE/4 of the SW/4; thence N 01° 09’ 45” W along the westerly line of the E/2 of the SE/4 of the SW/4 and along the westerly line of the SE/4 of the NE/4 of the SW/4 for 1267.08 feet; thence N 88° 50’ 15” E for 177.20 feet; thence N 02° 36’ 30” E for 227.70 feet; thence S 63° 51’ 34” E for 208.33 feet; thence S 23° 05’ 22” E for 102.00 feet; thence S 30° 43’ 31” E for 47.33 feet; thence S 86° 34’ 35” E for 223.71 feet to a point on the easterly line for 1244.97 feet to the point of beginning of said tract of land.

b) **COMPLIANCE WITH SEISMIC STANDARD**

The US Ecology Tulsa, Inc. facility is located in Tulsa County, Oklahoma (near the City of Tulsa). Appendix VI of 40-CFR Part 264 lists the political jurisdictions in which compliance with 40 CFR 264.18(a) must be demonstrated. The facility is not located in a political jurisdiction listed in Appendix VI of 40 CFR Part 264; therefore, no further information is required to demonstrate compliance with 40 CFR 264.18(a).

c) IDENTIFICATION OF 100 YEAR FLOODPLAIN

Identification of 100-year floodplain is noted on floodplain map in Attachment 1- Maps and Figures. There are no processes that involve hazardous waste that occur in the area of the US Ecology Tulsa, Inc. facility that is within the 100-year floodplain.

12) TRAINING PROGRAMS IN COMPLIANCE WITH 264.16: 40 CFR 270.14(b)(12)

The training program used at US Ecology Tulsa and associated checklists will be provided in Attachment 7- Training Programs and Documents.

13) CLOSURE, POST CLOSURE, AND INSURANCE DOCUMENTS: 40 CFR 270.14(b)(13) – 40 CFR 270.14(18)

A copy of the closure plan, any applicable post closure plan, and insurance documentation for US Ecology Tulsa will be provided in Attachment 8- Closure, Post Closure, and Insurance Documents.

14) TOPOGRAPHICAL MAP WITH REQUESTED INFORMATION: 40 CFR 214(b)(19)

The topographical map for the US Ecology Tulsa, Inc facility is provided in Attachment 1- Maps and Figures. All requirements will be displayed on the topographic map or another map within Attachment 1- Maps and Figures.

15) NOTICE OF APPROVAL OF PETITION FOR EXTENSION FOR LAND DISPOSAL FACILITIES: 40 CFR 270.14(b)(21)

US Ecology Tulsa, Inc does not conduct activities that would be defined as land disposal, so this requirement is not applicable.

<u>ADDITIONAL INFORMATION</u>

16) GROUNDWATER MONITORING DATA DURING INTERIM STATUS: 40 CFR 270.14(c)(1)

US Ecology Tulsa, Inc. is not in interim status, so this requirement is not applicable.

17) IDENTIFICATION OF THE UPPERMOST AQUIFER, HYDRAULICALLY CONNECTED AQUIFERS, FLOW DIRECTION AND RATE, AND BASIS FOR SUCH IDENTIFICATION: 40 CFR 270.14(c)(2)

The required information for this section is provided in Attachment 9- Groundwater Monitoring Information.

18) TOPOGRAPHICAL MAP INFORMATION-DELINIATION OF WASTE MANAGEMENT AREA, PROPERTY BOUNDARY, PROPOSED POINT OF

COMPLIANCE (264.95), PROPOSED GW MONITORING WELLS, AND INFO FROM 270.14(c)(2): 40 CFR 270.14(c)(3)

The required information will be provided in the topographical map located in Attachment 1- Maps and Figures.

19) DESCRIPTION OF PLUME OF CONTAMINATION FROM A REGULATED UNIT: 40 CFR 270.14(c)(4)

There has been no release from a regulated unit at the US Ecology Tulsa facility, so this section does not apply.

20) DETAILED GW MONITORING PROGRAM WITH ENGINEERING REPORT: 40 CFR 270.14(c)(5)

The detailed GW monitoring program with engineering report for US Ecology Tulsa, Inc. is provided in attachment 9- Groundwater Monitoring Report.

21) DETECTION MONITORING PROGRAM: 40 CFR 270.14(c)(6)

The detection monitoring program, which includes information about the indicators and waste constituents, proposed groundwater monitoring system, background values, and proposed sampling, analysis, and statistical procedures will be provided in Attachment 9- Groundwater Monitoring Report.

----------END OF SECTION----------

SECTION C

RCRA Part B Permit Application

INFORMATION REQUIREMENTS FOR CONTAINERS

40 CFR 270.15

US Ecology Tulsa

Tulsa, Oklahoma

Permit Application **July 6, 2022**

Section C- Information Requirements for Containers Table of Contents

Information Requirements for Containers

This section will provide the information required for hazardous waste container management at US Ecology Tulsa per 40 CFR 270.15 and 40 CFR 265 requirements. US Ecology Tulsa utilizes containers for waste storage and treatment. The five areas permitted for waste storage and treatment include Container Management Area 1 (CMA-1), Container Management Area 2 (CMA-2), Container Management Area 3 (CMA-3), Container Treatment Area 2 (CTA-2), and Container Treatment Area 3 (CTA-3).

1) DESCRIPTION OF CONTAINMENT SYSTEM IN COMPLIANCE WITH 264.175: 40 CFR 270.15(a)

a) BASIC DESIGN PARAMETERS, DIMENSIONS, AND MATERIALS OF CONSTRUCTION: 40 CFR 270.15(a)(1)

Storage of hazardous waste in containers is conducted in three (3) container management areas (CMA-1, CMA-2, and CMA-3), and two (2) container treatment areas (CTA-2, CTA-3). The CTAs may only store hazardous wastes that do not contain free liquids as determined by the methods described in Attachment 2- Waste Characteristics and Waste Analysis Plan. Locations of these units are shown on Figure A-2 General Facility Layout presented in Attachment 1- Maps and Figures. Design parameters, dimensions, and materials of construction of the secondary containment systems are presented in the appendices at the end of this section. Per 40 CFR 264.175(c), the areas where hazardous waste containers are stored in Container Treatment Areas (CTA-2 and CTA-3) need not be provided with secondary containment since only containers with no hazardous free liquids are stored in these areas. In addition, these areas are sloped so that the containers do not sit in rainwater, or they are elevated to protect the container from accumulated liquid. Appendix___ Hazardous Waste - Container Management Areas provides additional details regarding containment and capacity of these units.

b) SHOWING OF HOW DESIGN PROMOTES DRAINAGE OR KEEPS CONTAINERS FROM CONTACTING STANDING LIQUID: 40 CFR 270.15(a)(2)

Containment systems for CMAs at US Ecology Tulsa, Inc. are designed with slopes for drainage of liquids or are otherwise designed and operated to drain and remove liquids resulting from leaks, spills, or precipitation, except where the containers are elevated or are otherwise protected from contact with accumulated liquids. Hazardous waste in containers may be managed on pallets or directly on the container management area floor. Standard operating procedures include weekly inspections in accordance with container inspection requirements outlined in Attachment 4- Inspection Schedules and Forms and Attachment 6- Procedures to Prevent Hazards. The inspections facilitate the detection and appropriate management of liquids accumulated in CMAs.

c) CAPACITY OF THE CONTAINMENT SYSTEM RELATIVE TO THE NUMBER AND VOLUME OF CONTAINERS STORED: 40 CFR 270.15(a)(3)

In accordance with 40 CFR 264.175, containment systems for container storage areas that may contain free liquids must have sufficient capacity to contain 10% of the total volume of containers or the volume of the largest container, whichever is greater. Containers that do not contain free liquids need not be considered in this determination. See Appendices at the end of this attachment for details regarding capacity of containment systems for container storage areas. CMAs which share containment structures with tank storage areas (CMA-2 and TF-1) will be equipped with adequate containment for 10% of the total volume of hazardous waste storage capacity (containers and tanks), the volume of the largest container, or the volume of the largest tank, whichever is greatest. In accordance with the containment requirements for tank systems, any tank and container co-management area will be provided with a containment volume adequate to contain the additional volume of the precipitation of the 24-hour, 25-year rainfall event, if the co-management area is not protected from precipitation.

d) PROVISIONS FOR PREVENTING OR MANAGING RUN-ON: 40 CFR 270.15(a)(4)

CMA-1, CMA-2, and CMA-3 are equipped with secondary containment structures which are designed to contain accumulated liquid within containment systems. Containment structures will minimize the potential for run-on of precipitation into containment systems. Where installed, the roof or canopy (or equivalent cover) will minimize the accumulation of precipitation in containment systems.

e) SHOWING OF HOW ACCUMULATED LIQUIDS CAN BE ANALYZED AND REMOVED TO PREVENT OVERFLOW: 40 CFR 270.15(a)(5)

US Ecology Tulsa, Inc. operating procedures include inspections designed to identify accumulated liquids in a timely manner (inspection schedule and criteria are outlined in Attachment 4-Inspection Schedule and Forms). After discovery, spilled or leaked waste and accumulated precipitation will be removed from the sump or collection area in as timely a manner as is necessary to prevent overflow of the collection system. Accumulated liquids will be identified by visual observation, review of facility records, and (if deemed necessary) by chemical analysis. If required, analyses will be conducted in accordance with the facility Waste Analysis Plan presented in Attachment 2- Waste Characteristics and Waste Analysis Plan. If analysis indicates that the removed accumulated liquids are hazardous, they will be handled in accordance with all local, state, and federal regulations.

2) SHOWING OF COMPLIANCE WITH 264.175 FOR STORAGE AREAS WITH CONTAINERS THAT DO NOT CONTAIN FREE LIQUID: 40 CFR 270.15(b)

The following sections describe the procedures performed at US Ecology Tulsa, Inc. to confirm that the hazardous wastes that are stored in areas without containment do not contain free liquid or any waste carrying F020, F021, F022, F023, F026, and/or F027 codes.

a) TEST PROCEDURES AND RESULTS OR DOCUMENTATION TO SHOW WASTES DO NOT CONTAIN FREE LIQUID: 40 CFR 270.15(b)(1)

Prior to storage of solid hazardous waste outside of containment areas, a visual inspection will be performed to confirm that the waste is not liquid therefore would not require secondary containment. If there is question as to whether the waste is solid or liquid, a sample of the waste will be subjected to the Paint Filter Liquids Test, (PFLT) Method 9095 in SW 846, in accordance with facility sampling protocol (for waste acceptance) and the Waste Analysis Plan located in Attachment 2- Waste Characteristics and Waste Analysis Plan. If testing is performed, the results are maintained in the electronic profile system and maintained as part of the operating record.

b) DESCRIPTION OF STORAGE AREA DESIGN AND OPERATION TO DRAIN/REMOVE LIQUID OR KEEP CONTAINERS FROM CONTACTING STANDING LIQUID: 40 CFR 270.15(b)(2)

Areas where solid hazardous waste or nonhazardous waste is stored at US Ecology Tulsa, Inc. (CTA-2, CTA-3) are designed with slopes for drainage of liquids or are otherwise designed and operated to drain and remove liquids resulting from leaks, spills, or precipitation, except where the containers are elevated or are otherwise protected from contact with accumulated liquids. Solid hazardous waste in containers may be managed on pallets or directly on the container management area floor. Standard operating procedures include daily inspections in accordance with container inspection requirements outlined in Attachment 4- Inspection Schedules and Forms and Attachment 6- Procedures to Prevent Hazards. The inspections facilitate the detection and appropriate management of liquids accumulated in CMAs.

3) COMPLIANCE WITH 264.176 (IGNIGTABLE WASTE) AND 264.177(c) (INCOMPATIBLE WASTE) AND PROCEDURES IN COMPLAINCE WITH 264.177(a) & (b) AND 264.17(b) & (c) FOR STORING OF INCOMPATIBLE WASTES: 40 CFR 270.15(c) and 40 CFR 270.15(d)

Management practices for ignitable, reactive, and incompatible wastes at US Ecology Tulsa, Inc. have been designed to minimize the potential for fires, explosions, gaseous emission, leaching, or other discharge of hazardous waste or hazardous waste constituents which could result from the mixing of incompatible wastes or materials if containers break or leak. A specific procedure for the management of these wastes is outlined in Attachment 6 Procedures to Prevent Hazards. US Ecology Tulsa, Inc. will not place incompatible wastes, or incompatible wastes and materials in the same container, unless the requirements of 40 CFR 264.17(b) are complied with. In addition, hazardous waste will not be placed in an unwashed container that previously held an incompatible waste or material. Containers holding ignitable or reactive wastes will be located at least 50 feet from the US Ecology Tulsa, Inc. facility property line. Any container holding a hazardous waste that is incompatible with any waste or other materials will be separated from the other materials by means of a dike, berm, wall, or other equivalent device; portable containment units may be used for this purpose.

----------END OF SECTION----------

Appendix 1- Container Management 1 (CMA-1) Information

I. Unit Description

The EQ Oklahoma, Inc. (EQOK) hazardous waste Container Management Area 1 (CMA-1) has a permitted capacity for 10,560 gallons of hazardous waste (liquids or solids). Containment requirements are based on storage of liquid hazardous wastes. Unit area, permitted capacity, required containment, containment capacity, and 55 gallon drum equivalents for CMA-1 are summarized in Appendix 4- Hazardous Waste Container Management Area Information Table at the end of this document.

II. Basic Design, Parameters, Dimensions, and Materials of Construction

CMA-1 is designed in accordance with NFPA Code and BOCA National Building Code requirements for this unit prior to construction. Incompatible wastes may be stored in this area. Incompatible materials will be segregated by walls, diking, or portable containment units.

The base of CMA-1 is constructed of concrete which is maintained free of gaps and cracks. The concrete is coated with an impervious, chemically resistant material which will contain leaks, spills, and accumulated precipitation until they are detected and removed. The concrete base of CMA-1 is sloped to minimize the potential for the containers to be exposed to standing liquids in the containment system. See Appendix 4- Hazardous Waste Container Management Area Information Table at the end of this document for details regarding containment capacity.

III. Containment System Capacity - Number of Containers and Total Volume

The unit is equipped with 9,093 gallons of available volume for containment. This volume is sufficient to contain ten percent of the total permitted volume or the volume of the largest container, whichever is greater (i.e., 10,560 gallons X .10 = 1,056 gallons). This unit is designed to provide separate containment areas; the required containment volume will be subdivided accordingly. The sub-areas allow separation during storage of incompatible materials.

Fifty-five (55) gallon size or larger containers may be double stacked during storage; pallets, skids, or equivalent devices may be used to facilitate container management. Smaller containers may be stored in stacks of multiple containers. Total stack height will be limited to eight (8) feet or less. Configuration of pallets will be in rows approximately four to five (4-5) feet wide. Each row will be accessible for inspection. A minimum aisle space of three (3) feet will be maintained between rows. Containers will be removed from the storage facility manually or with container moving equipment. Gondolas will be moved using mechanized procedures as appropriate. Loading activities will be conducted at this unit.

When service of CMA-1 is changed, US Ecology Tulsa, Inc. will evaluate the need for decontamination procedures. The affected section will be decontaminated when visual evidence of contamination is identified through the evaluation. Decontamination procedures will consist of one to two washes with water or other appropriate cleaning agent. Wash water will be disposed of in accordance with state and federal regulations.

The coating installed on the concrete slab is compatible with the waste stored in the CMA. The facility inspection schedule (presented in Attachment 4- Inspection Schedules and Forms and Attachment 6- Procedures to Prevent Hazards) includes inspection of container management areas to assess condition of the concrete and coating (i.e., that the floor remains impervious and in good condition).

IV. Control of Run-On and Run-Off

CMA-1 is covered to minimize accumulation of precipitation. Containment structures are designed to prevent both run-on and run-off of stormwater.

V. Container Management Process

Process equipment located in and adjacent to CMA-1 is ancillary to hazardous waste container management operations. Specifically, container management equipment in CMA-1 may include pumps, mixing equipment, container moving equipment, sampling equipment, filtration equipment, size reduction equipment, and other treatment equipment as may be deemed appropriate.

VI. Containment Calculations for CMA-1

GIVEN:

CMA-1 wall height = 14.0 in

Length of west area of CMA-1 = 24 ft

Width of west area of CMA-1 = 34 ft

Length of east area of CMA-1 = 48.8 ft

Width of east area of CMA-1 = 12.8 ft

Length of intermediate berms = 13.0 ft

Intermediate berm width = 6.0 in

Intermediate berm height = 9.0 in

Length of rounded curb = 34.0 ft

Rounded curb width = 3.0 ft

Rounded curb height = 9.0 in

Drum radius = 1.0 ft

Pallet length and width = 4.0 ft

Pallet height (maximum) = 8.0 in

25-year, 24-hour rainfall event = 7.0 in

CONTAINMENT CAPACITY REQUIRED FOR CMA-1:

Total area of west area of CMA-1

(24.0 ft)(34 ft) = 816 ft2

Total area of east area of CMA-1

(48.8 ft)(12.8 ft) = 624.6 ft2

CMA-1 total area

816 ft2 + 624.6 ft2 = 1,440.6 ft2

Requirement for secondary containment

10% of total volume of containers = 1,056 gal

Volume of largest container < 1,056 gal

Greater of 10% total volume or volume of the largest container = 1,056 gal

Rainfall over contained area:

(7 in)(1,440.6 sq. ft)(1 ft/12 in) x 7.48 gal/cu. ft) = 6,286 gal

Total requirement: 1,056 gal + 6,286 gal = 7,342 gal

CONTAINMENT CAPACITY AVAILABLE FOR CMA-1:

Volume inside containment wall from flat ground level upward:

(1,440.6 sq. ft.)(14.0 in)(1 ft/12 in)(7.48 gal/cu. Ft.) = 12,572 gal

Volume displaced by berms, drums, and pallets to wall height (based on 4 double-stacked rows of 6 pallets per row, 4 drums per pallet with 3 feet aisle space). Displacement calculated for 14 inch wall.

Pallet displacement:

(4 rows)(6 pallets/row)(4 ft)(4 ft)(8 in)(1 ft/12 in)(7.48 gal/cu.ft.) = 1,915 gal

Drum displacement:

(4 rows)(6 pallets/row)(4 drum/pallet)(PI)(1 ft)(1 ft)(6 in) (1 ft/12 in)(7.48 gal/cu.ft.) = 1,127 gal

Intermediate berm displacement:

(13 ft)(9.0 in)(6.0in)(7.48 gal/cu.ft.)(1sq.ft/144 sq. in.) = 37 gal

Rounded curb displacement: = 400 gal

(see calculations at end of this section)

Total Capacity available:

12,572 gal – 1,915 gal – 1,127 gal – 37 gal – 400 gal = 9,093 gal

<u>EXCESS CONTAINMENT:</u> 9,093 gal - 7,342 gal = 1,751 gal

NOTE: Calculation is conservative since it assumes that the pallets are solid, instead of mostly empty space. Containers with 55-gallon capacity displace less than 80 % of the volume that a solid pallet would.

Appendix 2- Container Management Area 2 (CMA-2) Description

I. Unit Description

The US Ecology Tulsa, Inc. hazardous waste Container Management Area 2 (CMA-2) has a permitted capacity for 4,840 gallons of hazardous waste (liquids or solids). Containment requirements are based on storage of liquid hazardous wastes. Unit area, permitted capacity, required containment, containment capacity, and 55 gallon drum equivalents for CMA-2 are summarized in Appendix 4- Hazardous Waste Container Management Area Information Table

II. Basic Design Parameters, Dimensions, and Materials of Construction

There are 1,089 square feet of floor space in CMA-2. Incompatible wastes will not be stored in this area.

The base of CMA-2 is constructed of concrete which is maintained free of gaps and cracks. The concrete is coated with an impervious chemically resistant material which will contain leaks, spills, and accumulated precipitation until they are detected and removed. The concrete base of CMA-2 is sloped to minimize the potential for the containers to be exposed to standing liquids in the containment system.

III. Containment System Capacity- Number of Containers and Total Volume

CMA-2 has approximately 6,786 gallons of available volume for containment. This volume is sufficient to contain ten percent of the total permitted volume (i.e., 4,840 gallons X .10 = 484 gallons).

Fifty-five (55) gallon size or larger containers may be double stacked during storage; pallets, skids, or equivalent devices may be used to facilitate container management. Smaller containers may be stored in stacks of multiple containers. Total stack height will be limited to eight (8) feet or less. Configuration of pallets will be in rows approximately four to five (4-5) feet wide. Each row is accessible for inspection; minimum aisle space of three (3) feet is maintained between rows. Containers are removed from the storage facility manually or with drum moving equipment. Loading activities are conducted at this unit.

When service of CMA-2 is changed, US Ecology Tulsa, Inc. will evaluate the need for decontamination procedures. The affected section will be decontaminated when visual evidence of contamination is identified through the evaluation. Decontamination procedures will consist of one to two washes with water or other appropriate cleaning agent. Wash water will be collected and disposed of in accordance with state and federal regulations.

The coating installed on the concrete slab is compatible with the waste stored in the CMA. The facility inspection schedule (presented in Attachment 4- Inspection Schedules and Forms and Attachment 6-Procedures to Prevent Hazards) includes inspection of container management areas to assess condition of the concrete and coating (i.e., that the floor remains impervious and in good condition).

IV. Control of Run-On and Run-Off

CMA-2 is covered to minimize accumulation of precipitation. Containment structures are designed to prevent both run-on and run-off of stormwater.

V. Container Management Process

Process equipment located in and adjacent to CMA-2 is ancillary to hazardous waste container management operations. Specifically, container management equipment in CMA-2 may include portable pumps, mixing units, sampling equipment, container moving equipment, and other treatment equipment as may be deemed appropriate. This unit may be used interchangeably with solid waste and hazardous waste management activities.

VI. Containment Calculations for CMA-2

Note:

Containment areas for TF- 1 and CMA-2 are joined. The containment system for CMA-2 has sufficient capacity to contain the total volume of capacity required for container storage (i.e., 10% of total container capacity) plus the excess containment required for TF-1.

GIVEN:

TF-1 average wall height	=	1.77 ft
TF-1 wall length	=	52.8 ft
TF-1 wall width	=	36.0 ft
Tank radius (T-101)	=	6.0 ft
CMA-2 average wall height	=	12.4 in
CMA-2 area	=	1,088.6 ft2
Drum radius	=	1.0 ft
Pallet length and width	=	4.0 ft

Pallet height (maximum) = 8.0 in

25-year, 24-hour rainfall event = 7 in

CONTAINMENT CAPACITY REQUIRED FOR TF-1:

Volume of largest tank or 10% of total volume of tanks (whichever is greater) + rainfall:

Largest tank = 19,960 gal

10% of total volume of tanks = 10% (56,720 gal) = 5,672 gal

Rainfall:

(7 in)(ft/12 in)(52.8 ft)(36.0 ft)(7.48 gal/ft3) = 8,294 gal

Total requirement:

19,960 gal + 8,294 gal = 28,254 gal

CONTAINMENT CAPACITY AVAILABLE FROM TF-1:

Volume inside containment wall:

(1.77 ft)(52.8 ft)(36.0 ft)(7.48 gal/ft3) = 25,166 gal

Volume displaced by one tank (T101) to wall height :

π (6.0 ft)2(1.77 ft)(7.48 gal/ft2) = 1,497 gal

Volume displaced by other foundations:

(14 ft3)(7.48 gal/ft3) = 105 gal

Total capacity available:

25,166 gal - (1,497 gal + 105 gal) = 23,564 gal

CONTAINMENT CAPACITY REQUIRED FOR CMA-2:

Volume of largest container or 10% of total volume of containers (whichever is greater):

Largest container = 330 gal

10% of total volume of containers	=10% (4,840 gal)	=	484 gal
Total requirement:		=	484 gal

CONTAINMENT CAPACITY AVAILABLE FOR CMA-2:

CMA-2 volume

(1,088.6 ft2)(12.4 in)(ft/12 in) = 1,121 ft3

Volume inside containment wall:

(1,121 ft3)(7.48 gal/ft3) = 8,385 gal

Volume displaced by drums and pallets to wall height (there is physically only room to fit 14 pallets on the ground, which will hold 56 drums, the remaining volume of drums will be double stacked - above the containment wall height):

[14(4 ft)(4 ft)(8 in)(ft/12 in) + 56π(1 ft)2(12.4 in - 8 in)(ft/12 in)]

(7.48 gal/ft3) = 1,599 gal

Total capacity available:

8,385 gal - 1,599 gal = 6,786 gal

CONTAINMENT CAPACITY AVAILABLE FROM TF-1 AND CMA-2:

23,564 gal + 6,786 gal = 30,350 gal

CONTAINMENT CAPACITY REQUIRED FOR TF-1 AND CMA-2:

28,254 gal + 484 gal = 28,738 gal

EXCESS CONTAINMENT: 30,350 gal – 28,738 gal = 1,612 gal

Appendix 3- Container Management Area 3 (CMA-3) Description

I. Unit Description

The US Ecology Tulsa, Inc (USE Tulsa) hazardous waste Container Management Area 3 (CMA-3) has a permitted capacity for 30,560 gallons of hazardous waste (liquids or solids). Containment requirements are based on storage of liquid hazardous wastes. Unit area, permitted capacity, required containment, containment capacity, and 55 gallon drum equivalents for CMA-3 are summarized in See Appendix 4- Hazardous Waste Container Management Area Information Table at the end of this document.

II. Basic Design Parameters, Dimensions, and Materials of Construction

CMA-3 has been constructed to provide 7 smaller subunits, providing the opportunity to store incompatible wastes separate from each other. Containers are elevated above floor level by being placed either on pallets, or on integral feet (e.g., tote containers).

The base of CMA-3 is constructed of concrete that is maintained free of gaps and cracks. The concrete is coated with an impervious, chemically resistant material that will contain leaks, spills, and accumulated precipitation until they are detected and removed. The concrete base of CMA-3 is sloped in addition to requiring the containers to be managed on pallets or raised above the floor to minimize the potential for the containers to be exposed to standing liquids in the containment system. See Appendix 4- Hazardous Waste Container Management Area Information Table at the end of this document for details regarding containment capacity.

III. Containment System Capacity- Number of Containers and Total Volume

CMA-3 has been designed for a minimum of 6,323 gallons of available volume for containment, considering the displacement of the permitted volume of containers and their pallets. This volume will be sufficient to contain ten percent of the total permitted volume or the volume of the largest container, whichever is greater (i.e., 30,560 x 0.10 = 3,056 or the capacity of one 30 cubic yard bin = 6,058 gallons). The west room of CMA-3 has adequate space for 96 double-stacked pallet positions organized in 24 rows of four pallets each with a minimum 3-foot aisle space between each row. The east room of CMA-3 has adequate space for 12 double-stacked pallet positions organized in 3 rows of four pallets each with a minimum 3-foot aisle space between each row.

Fifty-five (55) gallon size or larger containers may be double stacked during storage; pallets, skids, or equivalent devices may be used to facilitate container management. Smaller containers may be stored in stacks of multiple containers. Total stack height will be limited to eight (8) feet or less. Configuration of pallets will be in rows approximately four to five (4-5) feet wide. Each row will be accessible for inspection; minimum aisle space of three (3) feet will be maintained between rows. Containers will be removed from the storage facility manually or with container moving equipment. Gondolas will be moved using mechanized procedures as appropriate. Loading and unloading activities will be conducted at this unit.

When service of CMA-3 is changed, US Ecology Tulsa, Inc. will evaluate the need for decontamination procedures. The affected section will be decontaminated when visual evidence of contamination is identified through the evaluation. Decontamination procedures will consist of one to two washes with water or other appropriate cleaning agent. Wash water will be disposed of in accordance with state and federal regulations.

The facility inspection schedule (presented in Attachment 4- Inspection Schedules and Forms and Attachment 6-Procedures to Prevent Hazardous) includes inspection of

container management areas to assess condition of the concrete and coating (i.e., that the floor remains impervious and in good condition).

IV. Control of Run-On and Run-Off

CMA-3 is an enclosed building to minimize accumulation of precipitation.

V. Container Management Process

Process equipment located in and adjacent to CMA-3 is ancillary to hazardous waste container management operations. Specifically, container management equipment in CMA-3 may include pumps, mixing equipment, container-moving equipment, sampling equipment, and other treatment equipment as may be deemed appropriate. Wastes may be treated or stored in containers. Gondola boxes or other containers, used to accumulate treated wastes transferred from mixing units, may be stored in this unit.

VI. Containment Calculations for CMA-3

In the west room, the top of the curb (containment berm) that runs the entire perimeter of the building and makes up the intermediate berms is noted as elevation 0. The curbs are 4" high at the deepest point, resulting in the floor directly next to the curb having an elevation of -4". The floor slopes up toward a center walkway that runs the east-west length of the west room. The top of this walkway is at elevation -1" (i.e. the top of the walkway is 1 inch lower than the top of the perimeter curb). Each west room "wedge" volume is calculated from the bottom of the curb to the top of the walkway (3-inch depth of wedge). There is an additional containment in that 1" space from the top of the walkway to the top of the curb that was not accounted for in the "wedge" calculations. Note: in the east room, there is no center walkway. Therefore, all containment capacity is accounted for in the "wedge" calculation.

<u>GIVEN:</u>

Maximum depth along north and south wall, west room = 4 in

Minimum depth in center of west room	=	1 in.
West room, north section length	=	90.67 ft
West room, south section length	=	94.67 ft
Row depth	=	18.25 ft
East room width	=	23 ft
East room length	=	46.25 ft
East room maximum depth	=	6 in
East room minimum depth	=	0 in

Pallet displacement volume:

Assume pallets constructed of three 2x4 stringers with six 1x6 deckboards, 48x48 overall

(3 stringers)(1.5 in)(3.5 in)(4 ft) + (12 deckboards)(.75 in)(5.5 in)(4 ft) = 1.8125 ft3

Assume all average pallet submerged in west and east room wedges.

CONTAINMENT CAPACITY REQUIRED FOR CMA-3:

Volume of largest container or 10% of total volume of tanks (whichever is greater) + rainfall:

Largest container (30 cubic yard box)		=	6,058 gal
or, 10% of total volume of containers=	10% (30,560 gal)	=	3,056 gal

Rainfall (since entire area is inside a building, no rainfall allowance required)

Total requirement: 6,058 gal + 0 gal = 6,058 gal

CONTAINMENT CAPACITY AVAILABLE FROM CMA-3:

Volume in west room, north wedge:

(90.67 ft)(18.25 ft)(3/12 ft)(0.5)(7.48 gal/ft3) = 1,547.2 gal

Volume in west room, south wedge:

(94.67 ft)(18.25 ft)(3/12 ft)(0.5)(7.48 gal/ft3) = 1,615.4 gal

Volume in east room, wedge:

(23 ft)(46.25 ft)(6/12 ft)(0.5)(7.48 gal/ft3) = 1,989.2 gal

Volume in west room, full room, 1 inch depth:

(90.67 ft)(48.25 ft)(1/12 ft)(7.48 gal/ft3) = 2,727.0 gal

Less volume of intermediate berms (4):

Wedge: (4 berms)(3 inch wedge/12)(18.25 ft)(1 ft)(0.5)(7.48 gal/ft3)= 68.3 gal

1" height: (4 berms)(1 inch/12)(18.25 ft)(1 ft)(7.48 gal ft3) = 22.8 gal

Less volume of pallets in west room:

(96 pallets)(1.8125 ft3/pallet)(7.48 gal/ft3) = 1,301.5 gal

Less volume of pallets in east room:

(12 pallets)(1.8125 ft3/pallet)(7.48 gal/ft3) = 162.7 gal

Total capacity available:

1,547.2 + 1615.4 + 1989.2 + 2727.0 – 68.3 – 22.8 – 1301.5 – 162.7 = 6,323.5 gal

<u>EXCESS CONTAINMENT:</u> 6,323.5 gal – 6,058 gal = 265 gal

Appendix 4- Hazardous Waste Container Management Area Information

Table

Hazardous Waste - Container Management Area Information									
Unit[1]	**Unit Area (sq. feet)**	**Permitted Storage Volume**		**Permitted Treatment**		**Required Containment**	**Containment Capacity**	**55 Gallon Drum**	**30 Yard Rolloff**
		(gallons)	**(cu. yds)**	**(gal/day)**	**(tons/day)**	**(gallons)**	**(gallons)**	**Equiv.**	**Equiv.**
Container Management Area 1 (CMA-1)[2]	1,441	10,560		10,560		1,056	9,093	192	
Container Management Area 2 (CMA-2)	1,089	4,840		4,840		484	6,786	88	
Container Management Area 3 (CMA-3)	5,726	30,560		30,560		6,058	6,323	555	
Container Treatment Area 2 (CTA-2)[2]	NA	2,500	120		120	6,060	6,060		4
Container Treatment Area 3 (CTA-3)	NA		900			NA	NA		30
Totals	NA	45,960	1,020	45,960	120	NA	NA	835	34

1-Capacity of CMAs is based on anticipated long term normal operations.

2-Containment capacity based on roof/canopy preventing rainfall onto area.

SECTION T

RCRA Part B Permit Application

INFORMATION REQUIREMENTS FOR TANK SYSTEMS

40 CFR 270.16

US Ecology Tulsa

Tulsa, Oklahoma

Permit Application **July 11, 2022**

SECTION T- Information Requirements for Tank Systems Table of Contents

SECTION T- Information Requirements for Tank Systems

This section will provide the information required for hazardous waste storage and treatment in tank systems at US Ecology Tulsa (USE Tulsa) per 40 CFR 270.16 and 40 CFR 264 requirements. US Ecology Tulsa utilizes tank systems in the area designated as Tank Farm 1, which includes tanks T-101, T-102, T-103, and T-107 for waste storage and treatment. USE Tulsa also uses stabilization pans in the CTA-2a and CTA-2b area for hazardous waste treatment. A map of the location of Tank Farm 1 and the CTA-2a and 2b treatment pans is provided in Attachment 1- Maps and Figures. Additional details concerning tank system processes are provided in attachment 10- Process Description.

1) WRITTEN ASSESSMENT BY INDEPENDENT P.E. CERTIFYING STRUCTURAL INTEGRITY AND SUITABILITY FOR HANDLING OF HAZARDOUS WASTES OF EACH TANK SYSTEM AS REQUIRED UNDER 264.191 & 192: 40 CFR 207.16(a)

A copy of the P.E. written assessment for equipment within Tank Farm 1 is provided in Appendix 1 of this attachment.

2) DIMENSIONS AND CAPACITY OF EACH TANK: 40 CFR 270.16(b)

The information for the dimensions and capacity of each tank located in TF-1 and CTA-2a and CTA-2b stabilization treatment pans are below:

a) Tank T-101: T-101 has a diameter of 12’ and a height of 20’. The capacity of T-101 is 16,800 gallons.

b) Tank T-102: T-102 has a diameter of 14’ and a height of 20’. The capacity of T-102 is 19,960 gallons.

c) Tank T-103: T-103 has a diameter of 14’ and a height of 20’. The capacity of T-103 is 19,960 gallons.

d) Tank T-107: T-107 has a diameter of 11’ and a height of 23’. The capacity of T-107 is 12,000 gallons.

e) CTA-2a: CTA-2a is a steel treatment pan with dimensions of 24’ x 18’ x 4’. It is surrounded by a steel containment box with the dimensions of 35’ x 35’ x 1’. CTA-2a has a capacity of 8,408 gallons.

f) CTA-2b: CTA-2b is a steel treatment pan with dimensions of 14’x 14.5’ x 5’. It is surrounded by a steel containment box with the dimensions of 24’ x 24’ x 2.5’. CTA-2b has a capacity of 7,236 gallons.

3) DESCRIPTION OF FEED SYSTEMS, SAFETY CUTOFFS, BYPASS SYSTEMS, AND PRESSURE CONTROL: 40 CFR 270.16(c)

US Ecology Tulsa, Inc. uses closed top tanks for storing liquid hazardous waste which are equipped with loading and unloading ports and vents; tank details for T101, T102 T103 and 107 are provided in Appendix 1 of this document. These tanks on-site are typically loaded using top fill lines and unloaded through bottom discharge lines or loaded/unloaded from bottom fill/discharge lines. Where present, manholes are used for inspection and cleaning operations. Discharge lines from the tanks are regulated by valves (or equivalent device). Chemical resistant flexible hoses are used for unloading of tank trucks. Typically, the rigid fill lines are attached to the tanks by flange couplings. Flexible lines with quick couplings are used to connect the inlet of a tank or tank manifold system to the outlet of a tank truck. The pressure control systems on tanks are the vents and thief hatches.

4) DIAGRAM OF PIPING, INSTRUMENTATION, AND PROCESS FLOW FOR EACH TANK SYSTEM: 40 CFR 270.16(d)

Details of piping, instrumentation, and process flow for tank systems are provided in Appendix 2 of this attachment. The normal process flow for TF-1 for a bulk shipment is summarized as follows: the truck is unloaded by connecting a flexible hose with quick disconnect couplings into one of the storage tanks directly or through a tank manifold system. The normal process flow for CTA-2a and CTA-2b treatment pans for containerized shipments is summarized as follows: the containers that are approved for treatment in the stabilization area are delivered to the staging area and segregated via permitted waste codes that can be treated in the designated pan. The normal process flow for CTA-2a and CTA-2b treatment pans for bulk shipment is summarized as follows: the truck is unloaded by connecting a flexible

hose with quick disconnect couplings and transferring the material directly into the designated treatment pan.

5) DESCRIPTION OF CORROSION PROTECTION SYSTEM AS REQUIRED UNDER 264.192(a)(3)(ii): 40 CFR 270.16(e)

Tanks T-101, T-102, T-103, and T-107 are constructed of fiberglass, which is resistant to corrosion and satisfies requirements for 264.192(a)(3)(ii).

Treatment pans CTA-2a and CTA-2b and their secondary containment pans are monitored for corrosion by performing quarterly thickness testing and results are recorded and compared to previous results to determine if pans are maintained at a thickness that will prevent leaks or containment failures.

6) INSTALLATION OF NEW TANK SYSTEMS IN COMPLIANCE WITH 264.192(b)(c)(d)(e): 40 CFR 270.16(f)

US Ecology Tulsa, Inc. is not installing a new tank system, so this section is not applicable.

7) DETAILED PLANS AND DESCRIPTION OF THE SECONDARY CONTAINMENT SYSTEM IN COMPLIANCE WITH 264.193(a)(b)(c)(d)(e)(f): 40 CFR 270.16(g)

Details of the containment system for Tank Farm 1 is provided in Appendix 3 of this section. US Ecology Tulsa, Inc. operating procedures include inspections designed to identify accumulated liquids in a timely manner (inspection schedule and criteria are outlined in Section 4- Inspection Schedules and Forms). The containment system for TF-1 is coated with an impervious, chemically resistant material. The containment systems for CTA-2a and CTA-2b are constructed of steel and are inspected daily for any breaches or additional issues. After discovery, spilled or leaked waste and/or accumulated precipitation will be removed from the sump or collection area in as timely a manner as is necessary to prevent overflow of the collection system. Accumulated liquids will be identified by visual observation, review of facility records, and (if necessary) by chemical analysis. If required, analyses will be conducted and material will be processed in accordance with the facility Waste Analysis Plan. (see

Attachment 2). Additional information about containment for CTA-2a and CTA-2b is provided in Appendix 4 of this section.

----------END OF SECTION----------

Appendix 1- Tank Farm 1 Certification Documents

TCI Tank Consultants, Inc.

April 20, 2007

Mr. Danny Rokisky
PermaFix Environmental Services
2700 South 25th West Avenue
Tulsa, Oklahoma 74107

Re: Certification of Tanks T-101, T-102 & T-103
2700 South 25th West Avenue
Tulsa, Oklahoma 74104

Dear Mr. Rokisky

In accordance with your request, we have the reviewed the design, fabrication and installation of the above referenced tanks and associated facilities located at the above stated address. We hereby summarize our assessment of the tank system in compliance with 40 CFR Part 265 Subpart J – Tank Systems that are used to store or treat hazardous waste.

1. The Tank System and secondary containment was originally designed by Williams Brothers Engineering of Tulsa which prepared a Certification Report on the initial installation including the existing tanks in 1990. Currently there are two (2) existing tanks within the secondary containment; Tanks T-104 and T-107. Since these tanks were covered by a previous Certification Report, they are not included in this report.

2. This Certification Report covers Two (2) new Tanks T-102 & T-103; and one (1) used Tank T-101 to be installed in the existing Secondary Containment with the two (2) existing Tanks T-104 and T-107.

3. The Tanks T-102 & T-103 were constructed in 2002 by Palmer Manufacturing & Tank, Inc. of Garden City, Kansas with corrosion-resistant fiberglass reinforced plastic (FRP) and is lined with Hetron 980 and appear to be suitable for its intended service.

4. The Tank T-101 was constructed approximately 20 years ago (exact age unknown) by Atlas Tank Company with corrosion-resistant fiberglass reinforced plastic (FRP) and is lined with Dion 6694 / 6060 and appears to be suitable for its intended service.

5. FRP is compatible with the wastewater to be stored in the tanks and provides maximum corrosion resistance. The interior corrosion barrier of the tanks is compatible with the specified compositions and concentrations of wastewater.

6. None of the tank system components are located underground or in a buried installation.

7. The design of the tanks was reviewed for compliance with ASME RTP-1 Reinforced Thermoset Plastic Corrosion Resistant Equipment under applicable load conditions as

• 4333 W. 21st St. • Tulsa, Oklahoma 74107 • (918) 583) 3968 • FAX (918) 583-3966 • www.tank-consultants.com •
Consulting Engineering, Environmental, and Inspection Services for Storage Tanks

TCI Tank Consultants, Inc.

specified in ASCE 7-02 Minimum Design Loads for Buildings and Other Structures. The structural steel supports for the tanks were reviewed for compliance with AISC Specification for the Design, Fabrication and Erection of Structural Steel for Buildings.

8. The modifications to Tanks T-101, T-102 & T-103 that were performed by PermaFix, including the addition of nozzles and the pressure containing covers, will not affect the structural integrity of the tanks. The design of the tanks was evaluated for a maximum internal pressure 0.50 oz per square inch. The design of the tanks appears to be adequate to contain the specified internal pressure without failure and without any leaks.

9. The tanks are equipped with hold-down anchors to the reinforced concrete foundation that will prevent floatation or dislodgment. The tanks are installed on a reinforced concrete foundation which is part of the secondary containment.

10. The reinforced concrete foundation was reviewed in accordance with ACI-318 Building Code Requirements for Structural Concrete and appears to be of sufficient thickness and contains sufficient steel reinforcing to adequately support the weight of tanks when fully loaded with wastewater. Per the original certification, the reinforced concrete foundation is 10" thick and is placed on a 12" aggregate base course. The load bearing surface is below the frost depth and the concrete structure should not be affected by frost heave. Since the tanks are anchored to the concrete foundation, the tank system should not be affected by frost heave. The containment structure has been in place for several years and no concrete damage from frost heave is visible.

11. The secondary containment was constructed of reinforced concrete of sufficient thickness to form an impervious barrier. Construction joints in the concrete included a shear key with a PVC water stop. The secondary containment area is coated with an epoxy corrosion-resistant material to prevent migration of spilled liquids through the concrete into the subsurface.

12. The secondary containment plus overflow area provides adequate capacity to contain a total spill of the largest tank plus a 25 year, 24-hour rainfall event equal to 7-inch of water. The two (2) existing drain holes in the wall of the Storage Tank Containment shall remain open to permit overflow into the Drum Storage area. The Drum Storage area shall be restricted to a maximum of eighty-eight (88) 55 Gallon Drums or Twenty-Two (22) Pallet Equivalents, where one Pallet Equivalent equals four (4) 55 Gallon Drums. See the attached spreadsheet for Containment Volume Calculations.

13. The piping system is constructed of Driscopipe 6400 and 8000 which is compatible with the wastewater and it appears to be properly installed and adequately supported in accordance with ASME B31.3 Process Piping Code.

14. The tanks were recently inspected by TCI and appear to be free of defects and are in good condition. There were no signs of structural damage or inadequate construction or improper installation. See attached TCI Tank Inspection Report.

• 4333 W. 21st St. • Tulsa, Oklahoma 74107 • (918) 583) 3968 • FAX (918) 583-3966 • www.tank-consultants.com •
Consulting Engineering, Environmental, and Inspection Services for Storage Tanks

TCI Tank Consultants, Inc.

15. The tanks were recently hydrotested for leaks. The tanks were filled with water to above the roof line and to a height that would adequately test the pressure holding capability of the tanks to contain 0.50 oz per square inch internal pressure. The liquid level was observed while the test was maintained for 4 hours and the tanks appeared to be structurally sound without any leaks. See attached TCI Tank Hydrotest Report.

The tank system is not leaking and is fit for service and the design for this installation meets or exceeds the requirements of 40 CFR Part 265 Subpart J – Tank Systems as related to the treatment and storage of liquids that at times may exhibit the characteristics of a hazardous waste.

I certify under penalty of law that this document and all attachments were prepared under my direction or supervision according to a system designed to assure that qualified personnel properly gather and evaluate the information submitted. Based on my inquiry of the person or persons who manage the system, or those persons directly responsible for gathering the information, the information submitted is, to the best of my knowledge and belief, true, accurate, and complete. I am aware that there are significant penalties for submitting false information, including the possibility of fine and imprisonment for knowing violations.

Please contact me if you have any questions or concerns regarding this transmittal.

Sincerely,

Ronald Dean Davis

Ronald Dean Davis

Oklahoma P.E. 11210

Attach: Containment Calculations
Inspection Reports
Hydrotest Reports

REGISTERED PROFESSIONAL ENGINEER
RONALD DEAN
DAVIS
11210
OKLAHOMA

Ronald Dean Davis
4/20/07

•4333 W. 21st St. • Tulsa, Oklahoma 74107 • (918) 583) 3968 • FAX (918) 583-3966 • www.tank-consultants.com •
Consulting Engineering, Environmental, and Inspection Services for Storage Tanks

Daryl Worley
2655 SE Evergreen Dr.
Bartlesville, OK 74006
Phone 918-333-2292
Mobile 918-440-3186
daryl_worley@sbcglobal.net

T107

Mr. Rob Boyd
A Clean Environment
2700 South 25th West Ave
Tulsa, OK 74107

RE: Tank 107 Certification

Dear Mr. Boyd:

In accordance with your request I have reviewed the design and made a visual inspection of the above referenced tank.

The tank was filled with water. The liquid level was measured and recorded. Twenty-four hours later the liquid level was again measured. This measurement revealed the tank was not leaking.

A visual examination of the tank was made. This visual examination did not reveal any signs of leaks. The structural integrity of the tank did not appear to be compromised.

Per the documents provided by you to me the tank is constructed of Fiberglass and lined with C-Veil. The material the tank is constructed and lined with is compatible with the material that will be contained in the tank.

At the time of the inspection no piping was connected to the tank.

Information provided by A Clean Environment did not indicate the tank would be operated above normal atmospheric pressures. The sustained temperature should not exceed 160° F. The tank should not be allowed to exceed 200° F for more than 1 hr.

No inspection of the secondary containment was made. The containment was also not evaluated as to the capacity. The tank appears to be structurally sound and is fit for service at normal atmospheric pressures.

I certify under penalty of law this document was prepared under my direction or supervision according to a system designed to assure qualified personnel properly gather and evaluate the information submitted. Based on my inquiry of the person or persons who manage the system, or those directly responsible for gathering the information, the information submitted is, to the best of my knowledge and belief true, accurate, and complete. I am aware there significant penalties for submitting false information, including the possibility of fines and imprisonment for knowing violations.

Please contact me if you have questions concerning this letter.

Sincerely,

Daryl Worley

Daryl Worley, P.E.
Oklahoma PE 19305
6-6-2009

REGISTERED PROFESSIONAL ENGINEER
DARYL LEE WORLEY
19305
OKLAHOMA

Daryl Worley 6-6-2009

Appendix 2- Process diagrams for Tank Farm 1 tank system

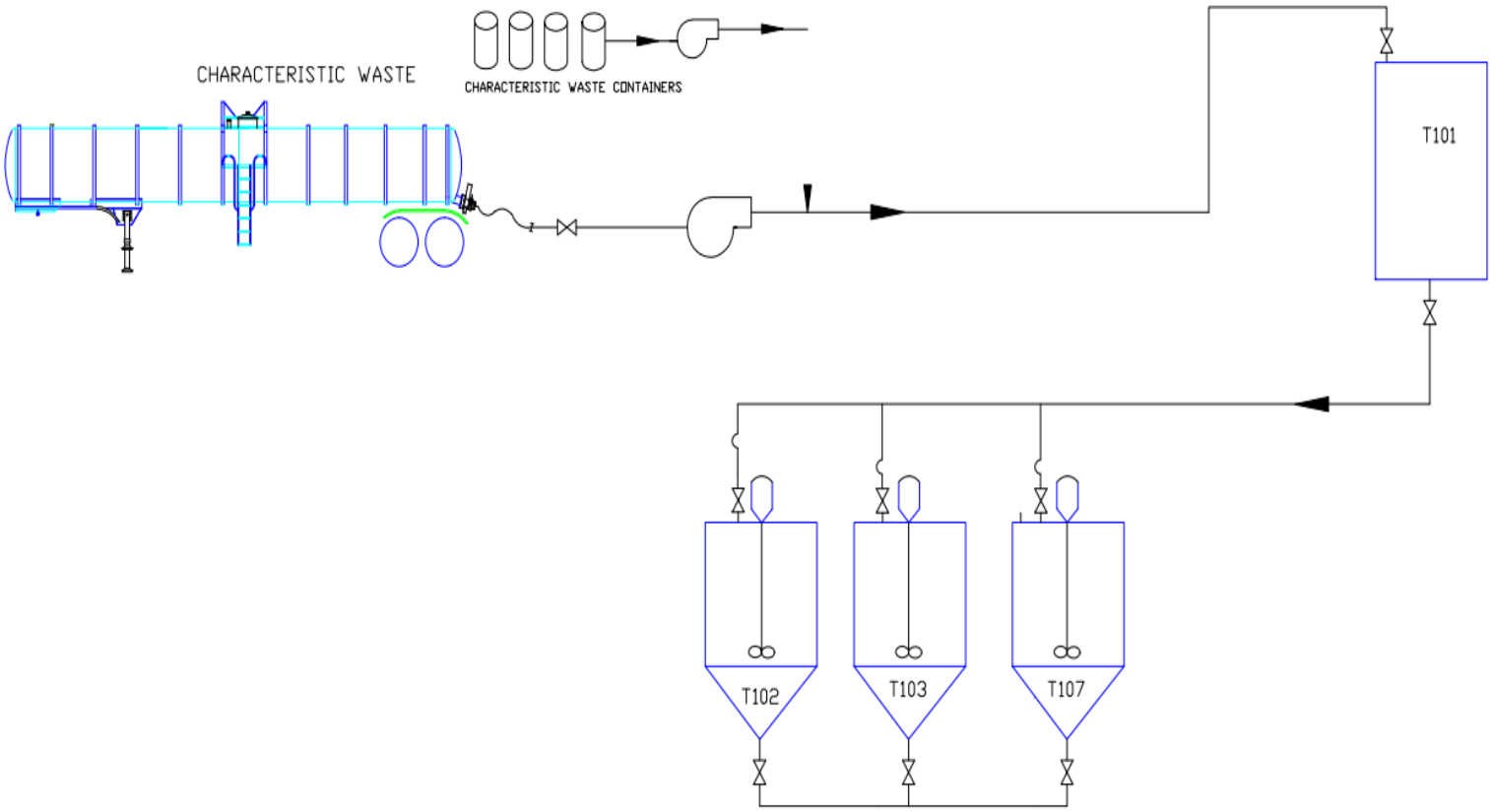

Waste is transferred to storage tanks from tankers or containers using compatible hoses and pump transfer systems. After this, the waste is stored and/or treated.

Appendix 3- Tank Farm 1 (TF-1) Detailed Information

I. Unit Description

The US Ecology Tulsa, Inc. (USE Tulsa) hazardous waste Tank Farm 1 (TF-1) has a permitted capacity for 56,720 gallons of hazardous waste liquids. Containment requirements are based on storage of liquid hazardous wastes. Information regarding tank designation, material of construction, tank age, and nominal capacity for TF-1 is summarized in Table 1- Hazardous Waste Tank System Summary which is presented at the end of this appendix.

Tank farm TF-1 has three (3) vertical above ground tanks, designated for hazardous waste service, which are located in a secondary containment system. Tank T101 is a fiberglass, flat bottom tank set on a pedestal foundation which was designed to withstand the weight of a fully loaded tank; the pedestal is also designed to provide drainage of condensate or potential leaks from under the tank bottom. Tanks T102 and T103 are cone bottom tanks set on legs and are fiberglass lined with C-Viel (vinylester). Tanks 102 and 103 are equipped with top beam mounted mixers. Chemical and heat resistance are provided by the structural and lining material.

II. Basic Design Parameters, Dimensions, and Materials of Construction

Tank T101 was manufactured by Atlas Tank Company of Yale, Oklahoma. A visual inspection was performed on all tanks during installation by a Williams Brothers Engineering Company representative. No evidence of punctures, scrapes, cracks, or other structural damage was identified by the inspection which might result in premature failure. After the tank was placed on its foundation, it was filled to capacity with water and held for a period of 24 hours. No leaks and/or evidence of leaks were detected, in T101 as indicated by a Williams Brothers Engineering Company representative.

Tanks T102 and T103 were manufactured by Palmer Manufacturing and Tank, Inc. A visual inspection was performed on T102 and T103 after installation by the certifying engineer. No evidence of punctures, scrapes, cracks, or other structural damage was identified by the inspection which might result in premature failure.

Tank T101 is located on concrete foundations with a leak detection system and secondary containment. The base of TF-1 is constructed of concrete which is maintained free of gaps and cracks. Tanks T102, T103 and T107 are elevated cone-bottom tanks, and thus leak inspection is easily available.

Fiberglass material (T101, T102, T103 and T107) is compatible with alkaline, ignitable, reactive, organic, and acidic wastes.

Tanks taken out of hazardous waste service may undergo partial closure, and subsequently, be used for storage of non-hazardous wastes, product, or stormwater.

III. Containment

TF-1 is equipped with a secondary containment system meeting the requirements of 40 CFR 264.193. Containment calculations are part of this attachment. Details regarding the leak detection system for TF-1 are part of the tank assessment document.

TF-1 is equipped with a leak detection system; the secondary containment system is coated with an impervious, chemically resistant material.

IV. Control of Run-On and Run-Off

TF-1 is equipped with secondary containment structures which will control run-on and run-off.

V. Tank Management Processes

Process equipment located in and adjacent to TF-1 is ancillary to hazardous waste tank management operations. Specifically, ancillary equipment may include portable pumps, screen and canister bag filters (or other filtration equipment), mixing equipment, and other treatment equipment as deemed appropriate.

When service of tanks is changed, USE Tulsa will evaluate the need for decontamination procedures. The tank will be decontaminated when evidence of visual contamination is identified or when "knowledge of process" based on tank usage indicates decontamination is appropriate. Decontamination procedures will consist of one to two washes with water or

other appropriate cleaning agent. Wash water will be disposed of in accordance with state and federal regulations.

The tanks are compatible with the waste stored. The facility inspection schedule (presented in Attachment 4- Inspection Schedules and Forms and Attachment 6- Procedures to Prevent Hazardous) includes inspection of tank systems.

VI. Leak Detection for Ancillary Equipment

Ancillary equipment for tanks T101, T102, T103 and T107 is located above ground in the secondary containment area which is coated with an impervious coating. The equipment is inspected daily.

VII. Containment Calculations for TF – 1

Note: Containment areas for TF- 1 and CMA-2 are joined. The containment system for CMA-2 has sufficient capacity to contain the total volume of capacity required for container storage (i.e., 10% of total container capacity) plus the excess containment required for TF-1.

GIVEN:

TF-1 average wall height	=	1.77 ft
TF-1 wall length	=	52.8 ft
TF-1 wall width	=	36.0 ft
Tank radius (T101)	=	6.0 ft
CMA-2 volume	=	1,121 ft3
CMA-2 average wall eight	=	12.4 in
Drum radius	=	1.0 ft
Pallet length and width	=	4.0 ft
Pallet height (maximum)	=	8.0 in
25-year, 24-hour rainfall event	=	7 in

CONTAINMENT CAPACITY REQUIRED FOR TF-1:

Volume of largest tank or 10% of total volume of tanks (whichever is greater) + rainfall:

Largest tank	=	19,960 gal
10% of total volume of tanks = 10% x (56,720 gal)	=	5,672 gal

Rainfall:

(7 in)(1 ft/12 in)(52.8 ft)(36.0 ft)(7.48 gal/ft3)	=	8,294 gal

Total requirement:

19,960 gal + 8,294 gal	=	28,254gal

CONTAINMENT CAPACITY AVAILABLE FROM TF-1:

Volume inside containment wall:

(1.77 ft)(52.8 ft)(36.0 ft)(7.48 gal/ft3)	=	25,166 gal

Volume displaced by one tank (T101) to wall height :

[(6.0 ft)2(1.77 ft)(7.48 gal/ft3)]π	=	1,497 gal

Volume displaced by other foundations:

(14 ft3)(7.48 gal/ft3)	=	105 gal

Total capacity available:

25,166 gal - (1,497 gal + 105 gal)	=	23,564 gal

CONTAINMENT CAPACITY REQUIRED FOR CMA-2:

Volume of largest container or 10% of total volume of containers (whichever is greater):

Largest container	=	330 gal
10% of total volume of containers = 10% (4,840 gal)	=	484 gal
Total requirement:	=	484 gal

CONTAINMENT CAPACITY AVAILABLE FOR CMA-2:

Volume inside containment wall:

(1,121 ft3)(7.48 gal/ft3)	=	8,385 gal

Volume displaced by drums and pallets to wall height (there is physically only room to fit 14 pallets on the ground, which will hold 56 drums, the remaining volume of drums will be double stacked - above the containment wall height):

[14(4 ft)(4 ft)(8 in)(1 ft/12 in) + 56π(1 ft)2(12.4 in - 8 in)(1 ft/12 in)](7.48 gal/ft3)

= 1,599 gal

Total capacity available:

8,385 gal - 1,599 gal = 6,786 gal

CONTAINMENT CAPACITY AVAILABLE FROM TF-1 AND CMA-2:

23,564 gal + 6,786 gal = 30,350 gal

CONTAINMENT CAPACITY REQUIRED FOR TF-1 AND CMA-2:

28,254 gal + 484 gal = 28,738 gal

EXCESS CONTAINMENT:

30,350 gal - 28,738 gal = 1,612 gal